SECTION 9

MISCELLANEOUS DETAILS

SECTION 9

9. LIST OF MISCELLANEOUS DETAILS

TITLE OF DRAWING

Roadway:

Major Arterial Street Section
Minor Arterial Street Section
Collector Street Section
Minor Access Street Section
Local Access Street Section
Half Street Section
Alley Section
Trench Pavement Restoration Detail
Asphalt Diamond Patch Detail
Poured Monument in Place Detail
Surface Monument Detail
Sight Obstruction Detail
Sidewalk Without Planting Strip Detail
Sidewalk With Planting Strip Detail
Cement Concrete Driveway Detail
Wheelchair Ramp Detail
Ramp Texture Detail
Concrete Curb and Gutter Detail
Turn Arrow Details
Pavement Marking Details
Parking Space Marking Details
Mailbox (Placement) Detail
Rock Wall Detail
Manhole or Catch Basin (Type II), Grade Adjustment Detail
Valve Box Adjustment Detail

Storm Drainage:

Storm Drain Pipe Trench Section Detail (Rigid Pipe)
Storm Drain Pipe Trench Section Detail (Flexible Pipe)
Catch Basin, Type I, Detail
Catch Basin, Type II, Detail (with Flow Restrictor if Applicable)
Catch Basin Frame and Grate Detail
Riprap and Energy Dissipation for Ditch Detail
New Ditch Construction Detail
Manhole or Catch Basin (Type II) Grade Adjustment Detail

Sanitary Sewer:

Typical Precast Manhole Detail
Typical Manhole Plan (View) Detail
Typical Shallow Precast Manhole Detail
Typical Saddle Manhole Detail
Outside Drop Manhole Detail
Inside Drop Manhole Detail

Sanitary Sewer - Continued

Manhole Frame and Cover Detail
Manhole Frame Collar Detail
Polypropylene Ladder and Manhole Steps Detail
Force Main Discharge Manhole Detail
Sanitary Sewer Trench Section for PVC Pipe Detail
Sanitary Sewer Trench Section for DI Pipe Detail
Pressure Line and Force Main Typical Trench Section Detail
Typical Side Sewer Detail (within New Development)
New Side Sewer Service (within Existing Street Right-of-Way)
Private Side Sewer Installation
Roof Structure for Electrical Enclosure Detail Lift Station
Lift Station Electrical Schematic Detail
Air and Vacuum Release Assembly (Sanitary) Detail
Manhole or Catch Basin (Type II Grade Adjustment Detail)

Water:

Water Main Depth Requirement Detail
Typical Utility Crossing Detail
Thrust Block Detail
Anchor Block Detail
Water Main Trench Section Detail
Wet Tap Connection Detail
Cut In Connection Detail
Fire Hydrant Assembly Detail
Relocate (Existing) Fire Hydrant Assembly Detail
Fire Hydrant Location (in cut or fill section) Detail
3/4" and 1" Water Service Detail (2 pages)
1-1/2" and 2" Water Service Detail
Meter and Meter Vault Assembly (3" thru 10") Detail (3 pages)
Air and Vacuum Release Assembly Detail
2" Blow-Off Assembly Detail
Water Sampling Station Detail (2 pages)
Pressure Reducing Station Detail (Two Pages)
Valve Extension Detail
Valve Box Adjustment Detail
Double Check Detector with Fire Connection
Detector Double Check Valve Assembly (2 pages)
Individual Double Check Detector Assembly Detail
Reduced Pressure Backflow Device Detail

General:

Swing Gate and Fence Detail
Straw Bale Dam Detail
Silt Fence Detail
Storm Drain Inlet Protection Detail
Street Tree Planting and Staking Detail
Street Trees and Landscaping Items

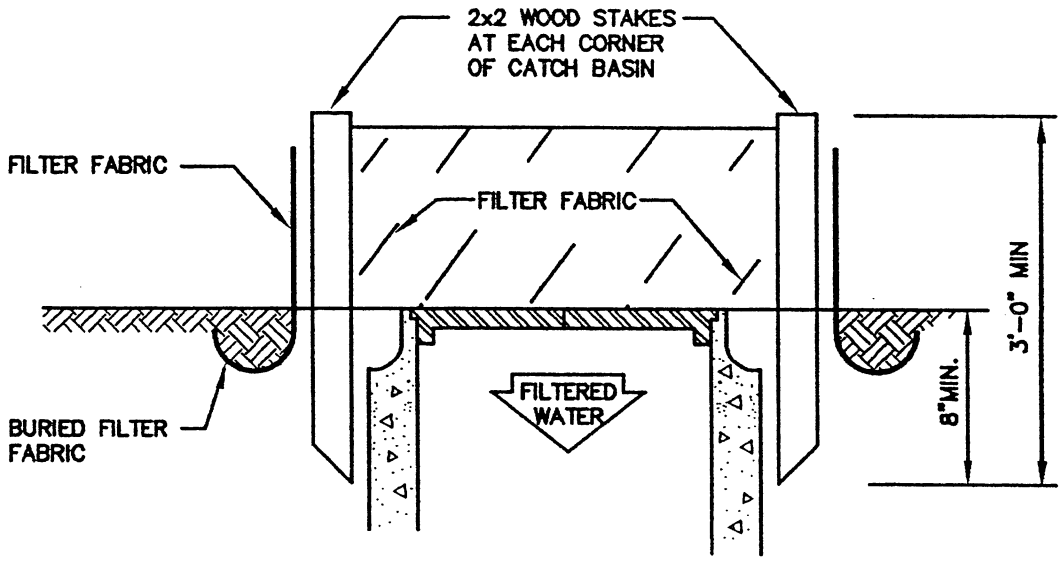

NOTE:
WOOD STAKES AROUND PERIMETER OF INLET SHALL BE SPACED A MAXIMUM OF 3 FEET APART

CITY OF LONG BEACH			
STORM DRAIN INLET PROTECTION			
APPROVED: BY CITY / DATE			DWG. NO. STOM-4
DATE: 8/96	DRWN: J.H.	CHKD: T.J.O.	SCALE: NONE

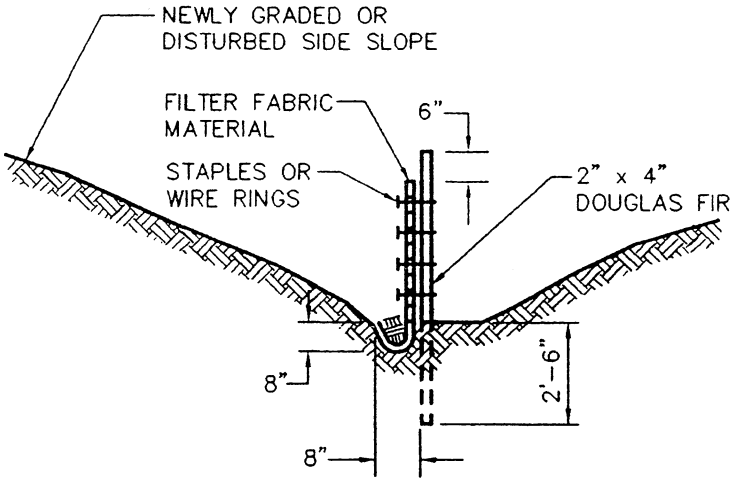

CROSS SECTION

NOTES:

1. WHERE POSSIBLE, MAINTAIN NATURAL VEGETATION FOR SILT CONTROL
2. TEMPORARY SILTATION TO BE CONSTRUCTED BY PLACING FILTER FABRIC FENCES ACROSS SWALES UTILIZING FILTER SYSTEM PRIOR TO DISCHARCH
3. ALL TEMPORARY SILTATION SHALL BE MAINTAINED IN A SATISFACTORY CONDITION UNTIL SUCH TIME THAT CLEARING AND/OR CONSTRUCTION IS COMPLETED AND SURFACE RESTORATION HAS BEEN COMPLETED
4. RETURN SILTATION CONTROL AREAS TO ORIGINAL GROUND CONDITIONS, UNLESS SPECIFICALLY DIRECTED OTHERWISE BY THE CITY

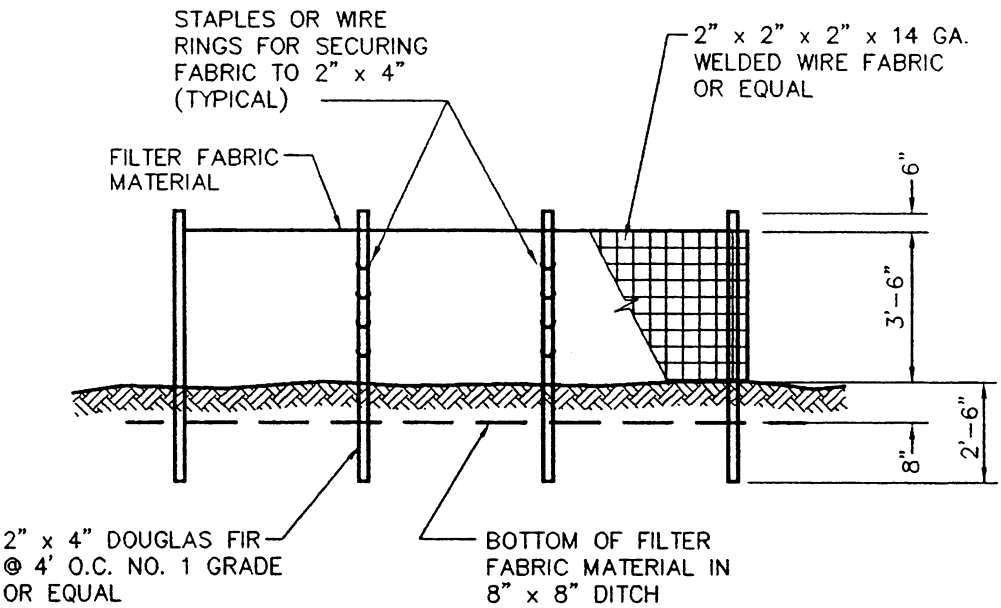

ELEVATION

SILT FENCE

CITY OF LONG BEACH			
SILT FENCE			
APPROVED: BY CITY / DATE			DWG. NO. EC-1
DATE: 8/96	DRWN: J.H.	CHKD: TT.J.O.	SCALE: NONE

NOTES:

1. WHERE POSSIBLE, MAINTAIN NATURAL VEGETATION FOR SILT CONTROL.

2. TEMPORARY SILTATION AND DETENTION PONDS TO BE CONSTRUCTED BY PLACING STRAW BALES OR FILTER FABRIC FENCES ACROSS SWALES. PONDS SHALL BE CONSTRUCTED TO PROVIDE 2 CUBIC FEET OF SETTLING POND PER 50 SQUARE FEET OF CLEARED AREA TRIBUTARY TO THE POND.

3. FILTER FABRIC FENCES OR STRAW BALES TO BE LOCATED AT THE BOTTOM OR TOE OF NEWLY EXCAVATED SLOPES AS INDICATED ON THE PLANS.

4. CONSTRUCT ROCK CHECK DAMS IN OPEN DITCHES AS REQUIRED

5. TO PROVIDE EROSION CONTROL ON STEEP AND NEWLY GRADED SLOPES, CONTRACTOR SHALL EMPLOY EROSION CONTROL BLANKET OR CLEAR PLASTIC IMEDIATELY AFTER GRADING SLOPES AND THE APPLICATION OF SEEDING. THIS SHALL BE DONE AND IN PLACE BEFORE THE FALL RAINFALL BEGINS.

6. ALL TEMPORARY EROSION CONTROL STRUCTURES SHALL BE MAINTAINED IN SATISFACTORY CONDITION UNTIL CLEARING AND/OR CONSTRUCTION IS COMPLETED AND SURFACE RESTORATION HAS BEEN COMPLETED.

7. RETURN SILTATION CONTROL AREAS TO ORIGINAL GROUND CONDITIONS.

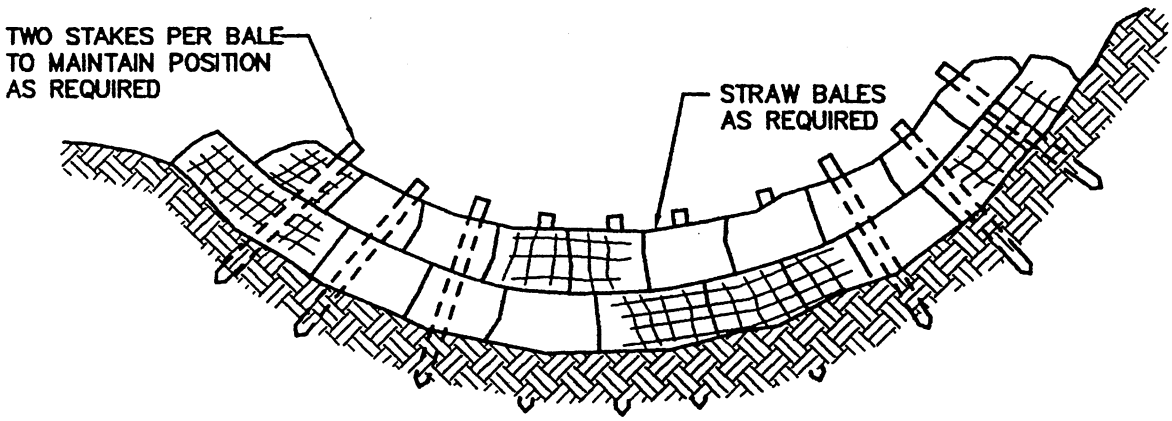

ELEVATION

STRAW BALE DAM

CITY OF LONG BEACH			
STRAW BALE DAM			
APPROVED: BY CITY / DATE			DWG. NO. EC-2
DATE: 8/96	DRWN: J.H.	CHKD: T.J.O.	SCALE: NONE

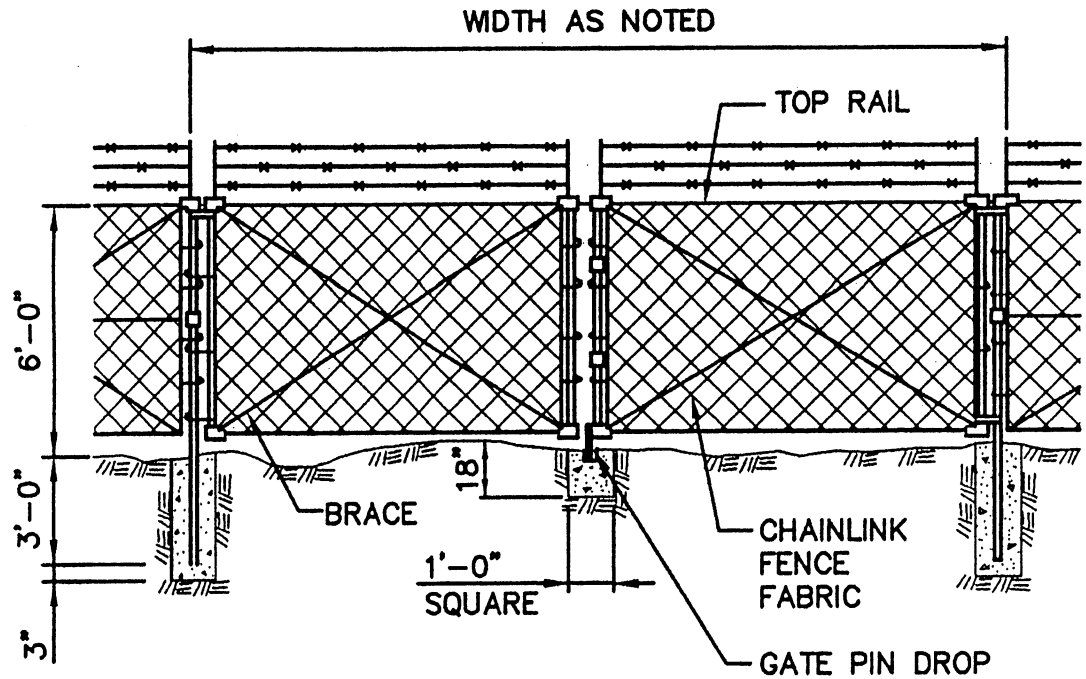

GATE ELEVATION

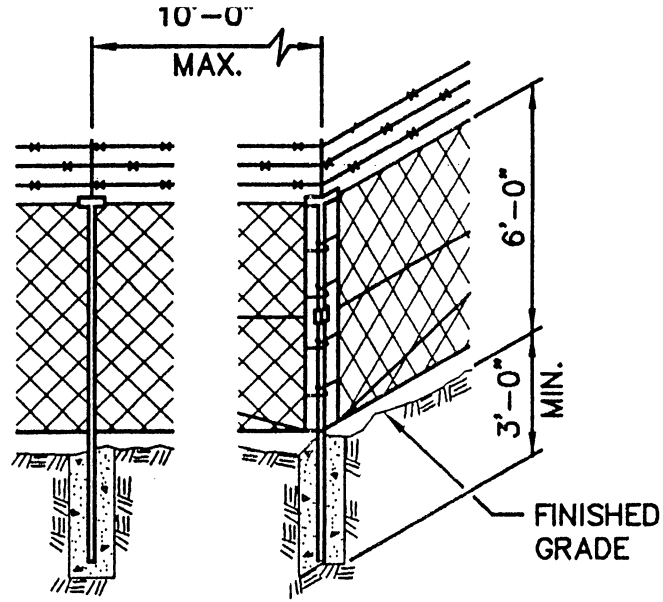

CORNER POST

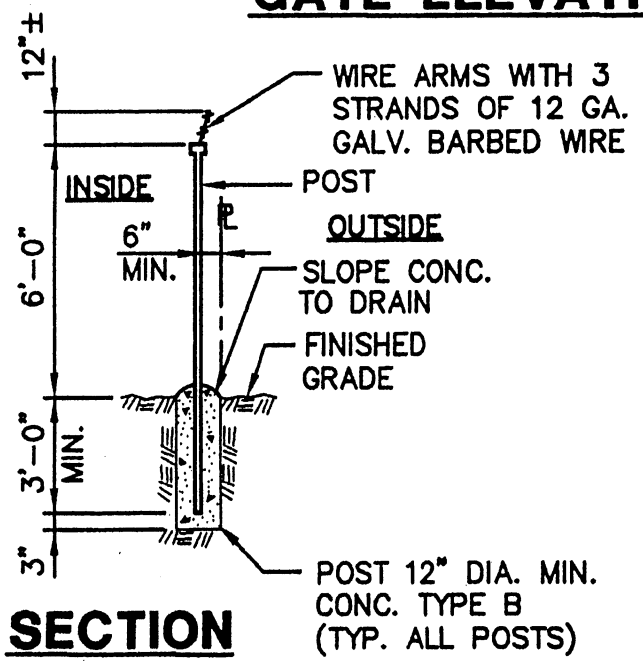

SECTION

NOTES:

1. CHAINLINK FENCE AND GATE SHALL BE FURNISHED AND INSTALLED ACCORDING TO THE WASHINGTON STATE DEPARTMENT OF TRANSPORTATION STANDARD SPECIFICATIONS 1991 FOR CHAINLINK FENCE TYPE 1 AS DETAILED ON STANDARD PLANS L-2 AND L-3.
2. CORNER POSTS SHALL BE INSTALLED AT ALL POINTS WHERE THE ALIGNMENT CHANGES 30° OR MORE.

CITY OF LONG BEACH			
SWING GATE AND FENCE DETAILS			
APPROVED: BY CITY / DATE			DWG. NO. SGF-1
DATE: 8/96	DRWN: J.H.	CHKD: T.J.O.	SCALE: NONE

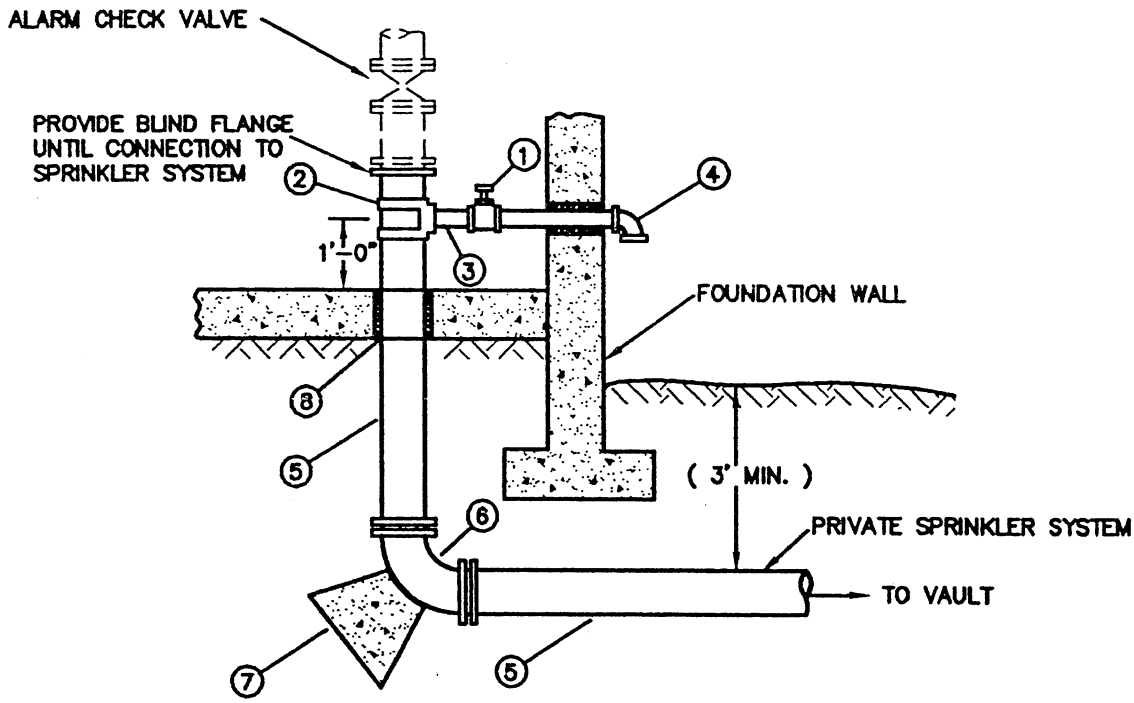

NO.	DESCRIPTION
1	2" GATE VALVE
2	FORD STAINLESS STEEL DOUBLE STRAP SADDLE (OR APPROVED EQUAL)
3	2" GALV. NIPPLE
4	2" GALV. 90° ELL
5	D.I. CL. 52 SUPPLY MAIN (SIZE AS DETERMINED BY FIRE FLOW REQUIREMENTS)
6	90° BEND (MJ X MJ) WITH MEGALUG ADAPTER
7	CONCRETE THRUST BLOCK (SIZE TO BE APPROVED BY CITY)
8	PIPE SLEEVE

NOTES:

1. AFTER SYSTEM IS TESTED, PURITY SAMPLES WILL BE TAKEN AT ALL RISERS IN SYSTEM

CITY OF LONG BEACH			
RISER DETAIL			
APPROVED: BY CITY / DATE			DWG. NO. RISER
DATE: 8/96	DRWN: J.H.	CHKD: T.J.O.	SCALE: NONE

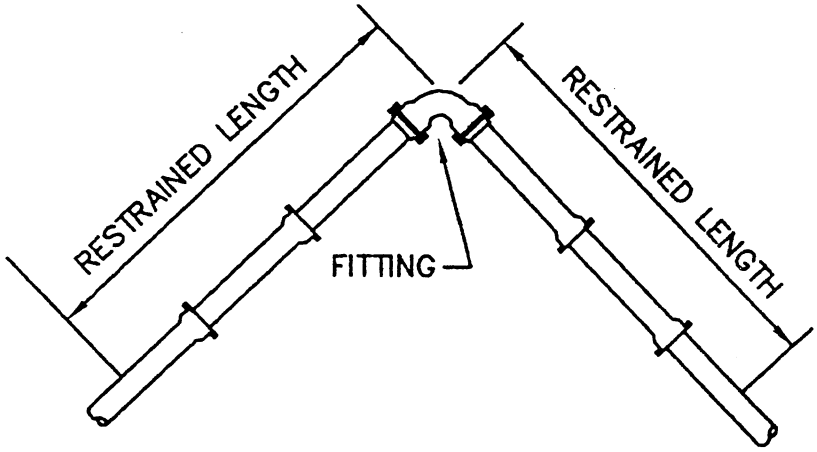

PIPE SIZE	90° BEND	45° BEND	22 1/2° BEND	11 1/4° BEND	TEE OR DEAD END CAP
	RESTRAINED LENGTH IN FEET				
4"	40	17	8	4	30
6"	55	23	11	6	39
8"	73	31	15	8	53
10"	88	37	18	9	67
12"	103	43	21	10	82
16"	133	55	27	13	110
18"	145	60	29	15	124

RESTRAINED LENGTHS SHOWN ARE MINIMUM AND FOR LINEAL FEET REQUIRED ON EACH SIDE OF FITTING INDICATED.

FOOTAGES ARE BASED ON 250 PSI PRESSURE AND 42 INCHES COVER. IF PRESSURE IS GREATER OR COVER IS LESS, THE RESTRAINED LENGTH SHALL BE INCREASED. DEVELOPER'S ENGINEER TO DESIGN SAME.

CITY OF LONG BEACH			
THRUST RESTRAINT FOR DUCTILE IRON PIPE			
APPROVED: BY CITY / DATE			DWG. NO. TRDIP
DATE: 8/96	DRWN: J.H.	CHKD: T.J.O.	SCALE: NONE

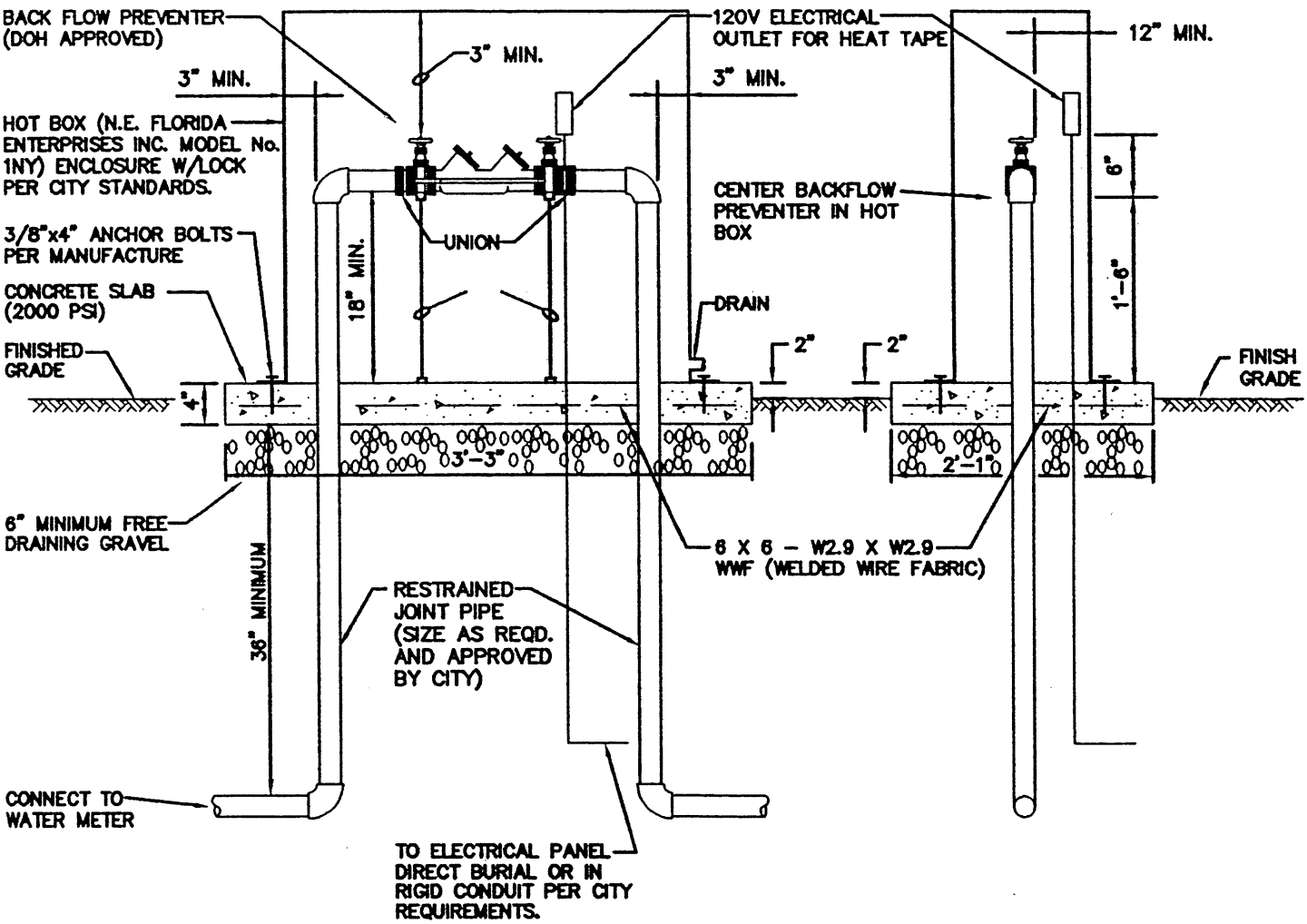

REDUCED PRESSURE BACKFLOW DEVICE

NOT TO SCALE

(1) PROVIDE CITY APPROVED SUPPORT FOR 2 1/2" AND LARGER DEVICES.

CITY OF LONG BEACH			
REDUCED PRESSURE BACKFLOW DEVICE			
APPROVED: BY CITY / DATE			DWG. NO. RPBD
DATE: 8/96	DRWN: J.H.	CHKD: T.J.O.	SCALE: NONE

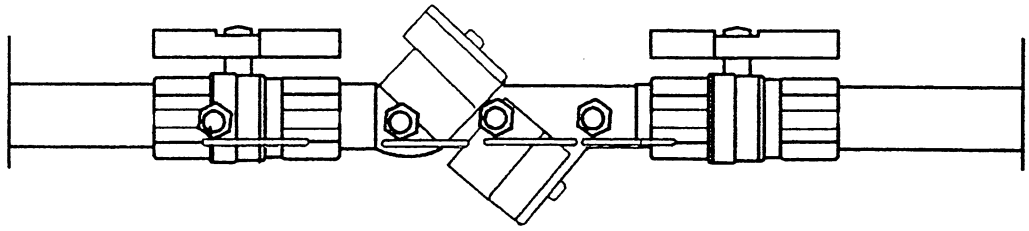

PLAN VIEW

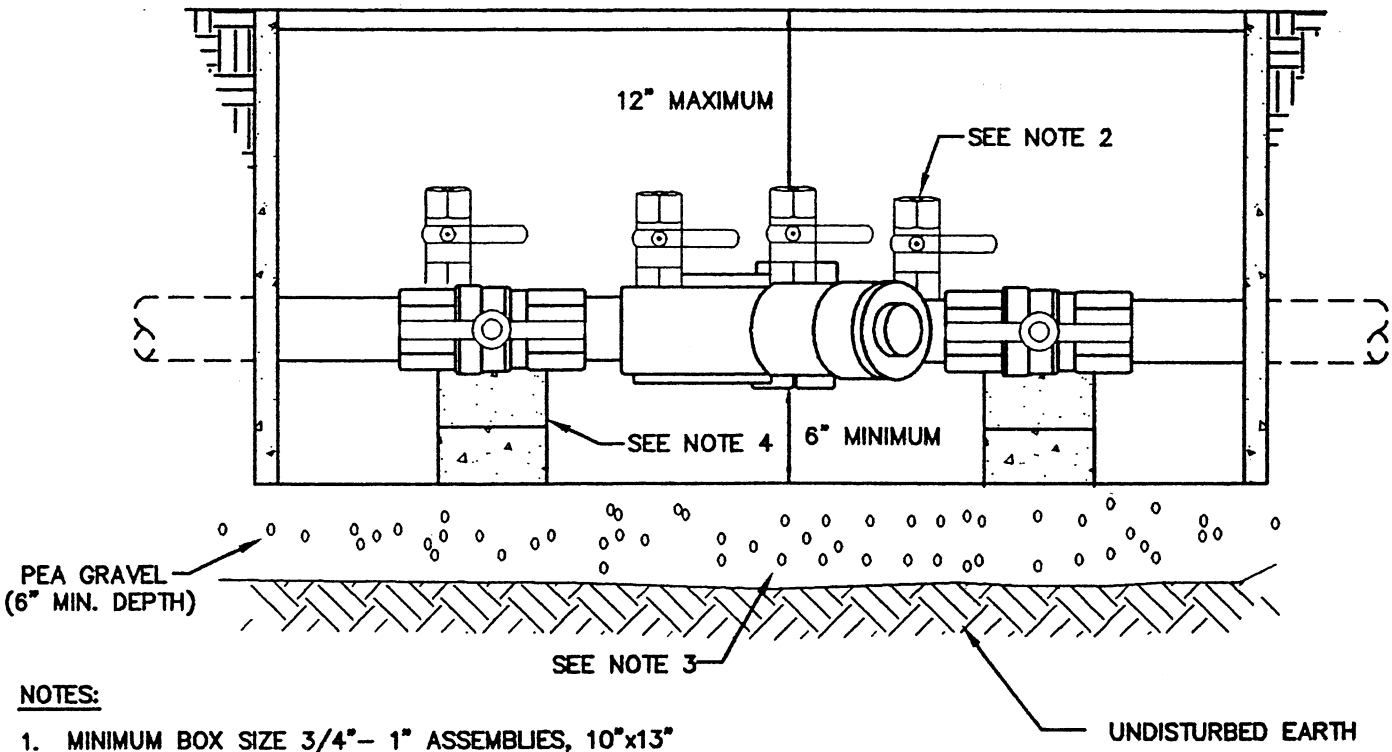

NOTES:

1. MINIMUM BOX SIZE 3/4"– 1" ASSEMBLIES, 10"x13"
   1 1/4"– 2" ASSEMBLIES, 14"x20"
2. ASSEMBLY MUST BE INSTALLED WITH TEST COCKS FACING UP OR TO ONE SIDE. INSTALL WATERTIGHT PLUGS IN ALL TEST COCKS.
3. SUFFICIENT DRAINAGE MUST BE PROVIDED TO PREVENT ASSEMBLY FROM BEING SUBMERGED.
4. PROVIDE SUPPPORT BLOCKS AS MAY BE REQUIRED.
5. PROVIDE A STRAINER WITH BLOW OUT TAPPING AHEAD OF DEVICE IF REQUIRED BY CITY.
6. THOROUGHLY FLUSH THE LINE, PRIOR TO THE INSTALLATION OF THE DCVA.
7. PROTECT DEVICE FROM FREEZING BY INSTALLING IN STRUCTURE OR PER "HOT BOX" SHOWN IN REDUCED PRESSURE BACKFLOW DEVICE DETAIL.

CITY OF LONG BEACH			
"INDIVIDUAL" DOUBLE CHECK DETECTOR ASSEMBLY			
APPROVED: BY CITY / DATE			DWG. NO. IDCDA
DATE: 8/96	DRWN: J.H.	CHKD: T.J.O.	SCALE: NONE

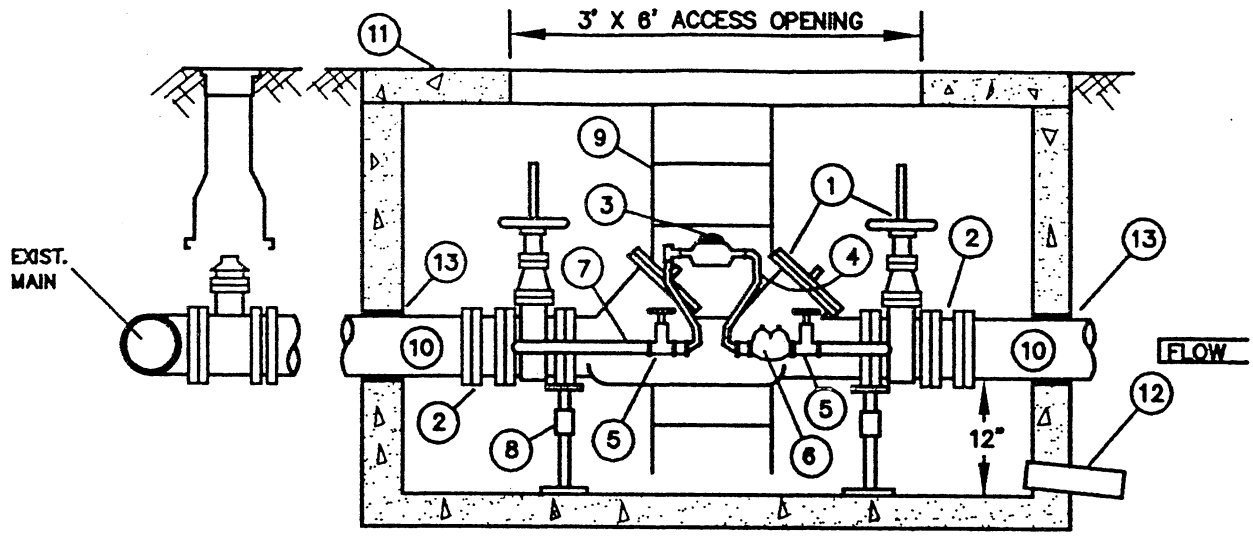

	DESCRIPTION
1	STATE APPROVED DOUBLE CHECK DETECTOR BACKFLOW PREV. ASSY. (W/O.S.&Y. V.)
2	ROMAC STYLE 'FCA 501' FLANGED COUPLING ADAPTER
3	5/8" X 3/4" SENSUS METER (GALLON READING)
4	FORD V42 RESETTER
5	SHUT-OFF VALVE
6	STATE APPROVED 3/4" DOUBLE CHECK VALVE ASSY.
7	BRASS OR TYPE K COPPER
8	2 EA. ADJUSTABLE STANCHIONS (LOCATE AT ENDS OF DOUBLE CHECK)
9	GALV. STEEL LADDER (LOCATE AS DIRECTED BY CITY)
10	PIPE SPOOL, CL. 52 D.I. PLAIN END
11	UTILITY VAULT. NO. 5106,-LA 5' X 10'-6" X 6'-2" H, INSIDE DIMEN., HINGED AND SPRING LOCKED STL. PL. COVER NO. 5106 TL-2-332 P (DOUBLE HATCH COVER) CHECK VAULT SIZE REQ'D. FOR ENCLOSING ASSY'S. SMALLER OR LARGER THAN 8" SIZE
12	6" PVC DRAIN LINE, DAYLIGHT OR STORM DRAIN TO CATCH BASIN
13	WATER TIGHT GROUT, INLET AND OUTLET PIPE, DRAIN

NOTE:

1. AFTER PRESSURE TEST AND PURITY SAMPLES ARE RECEIVED A CERTIFIED BACKFLOW TECHNICIAN MUST SUPPLY CITY WITH A WRITTEN TEST REPORT ON EACH BACKFLOW ASSY.
2. PROVIDE FLEXIBLE COUPLINGS OUTSIDE VAULT BOTH INLET AND OUTLET
3. FLANGED COUPLING ADAPTERS SHALL BE LOCATED A MINIMUM OF 6" FROM INNER WALL

CITY OF LONG BEACH			
DOUBLE-CHECK DETECTOR BACKFLOW PREVENTION ASSY.			
APPROVED: BY CITY / DATE			DWG. NO. DCDBPA
DATE: 8/96	DRWN: J.H.	CHKD: T.J.O.	SCALE: NONE

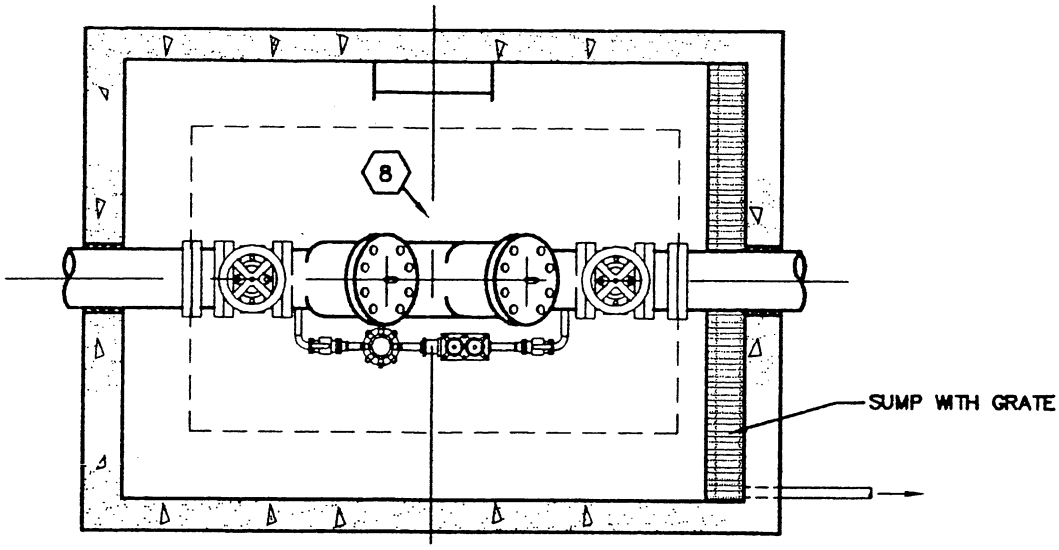

PLAN

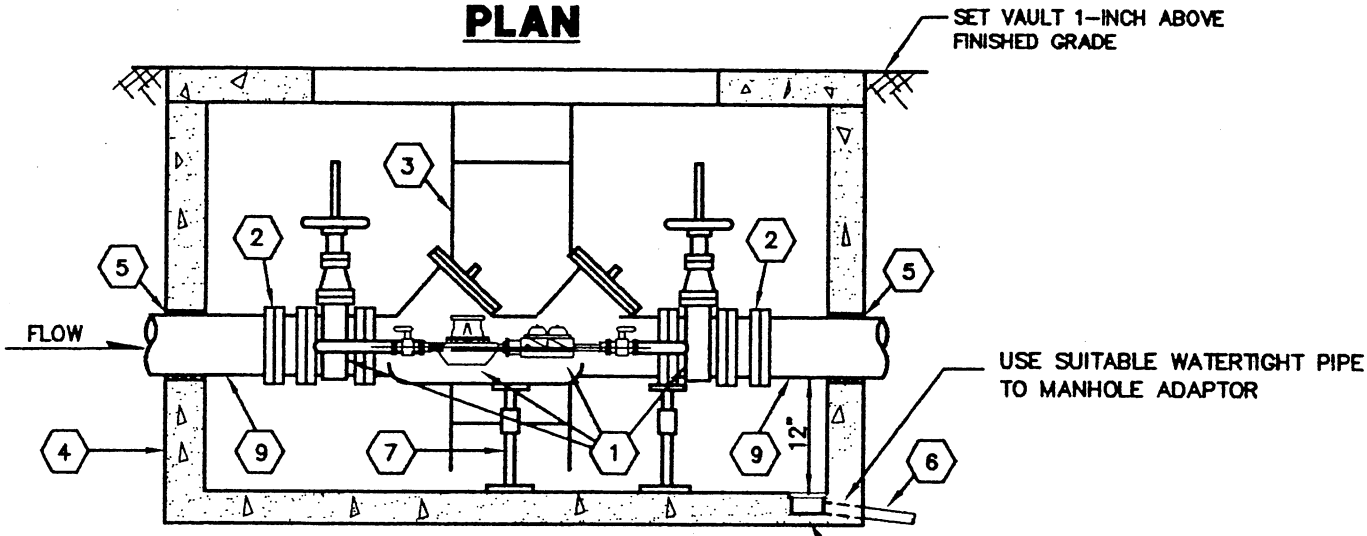

ELEVATION

1. HERSEY MODEL, DETECTOR DOUBLE CHECK VALVE ASSEMBLY SIZED BY CITY OR EQUAL
2. UNI-FLANGE WITH SET SCREWS
3. GALVANIZED STEEL LADDER TO BE SECURED TO VAULT
4. CONCRETE VAULT TO BE SIZED BY CITY, WITH BILCO COVER (H20 LOADING)
5. WATER-TIGHT GROUT. RESTRAIN INLET/OUTLET PIPE WITH WELDED FLANGE OR SHACKLE TO THRUST BLOCK TO PREVENT. SHACKEL THROUGH VAULT IF CHECK VALVE ASSEMBLY IS REMOVED.
6. 4" MIN. DIAMETER PVC DRAIN TO DAYLIGHT WHERE APPLICABLE. MINIMUM SLOPE 2%.
7. ADJUSTABLE PIPE STANCHION, GRINELL PIPE SUPPORTS.
8. VALVE ASSEMBLY TO BE CENTERED IN VAULT
9. CL. 53 D.I., MJ WITH MEGALUGS

NOTES:

1. ASSEMBLY SHALL BE MAINTAINED BY PROPERTY OWNER AND ANNUAL CERTIFICATION REQUIRED.
2. FIRELINE SHALL NOT BE PUT INTO SERVICE UNTIL THE THE BACKFLOW PREVENTION DEVICE IS APPROVED BY THE DISTRICT.
3. A REDUCED PRESSURE BACKFLOW PREVENTION DEVICE MAY BE REQUIRED BY THE DIRECTION OF THE CITY
4. PAINT PIPING WITH PARKER PAINT MARINE ENAMEL, MARARTHON 1065, TAHOE BLUE.

CITY OF LONG BEACH			
DECTECTOR DOUBLE-CHECK VALVE ASSEMBLY			
APPROVED: BY CITY / DATE			DWG. NO. DD-CVA
DATE: 8/96	DRWN: J.H.	CHKD: T.J.O.	SCALE: NONE

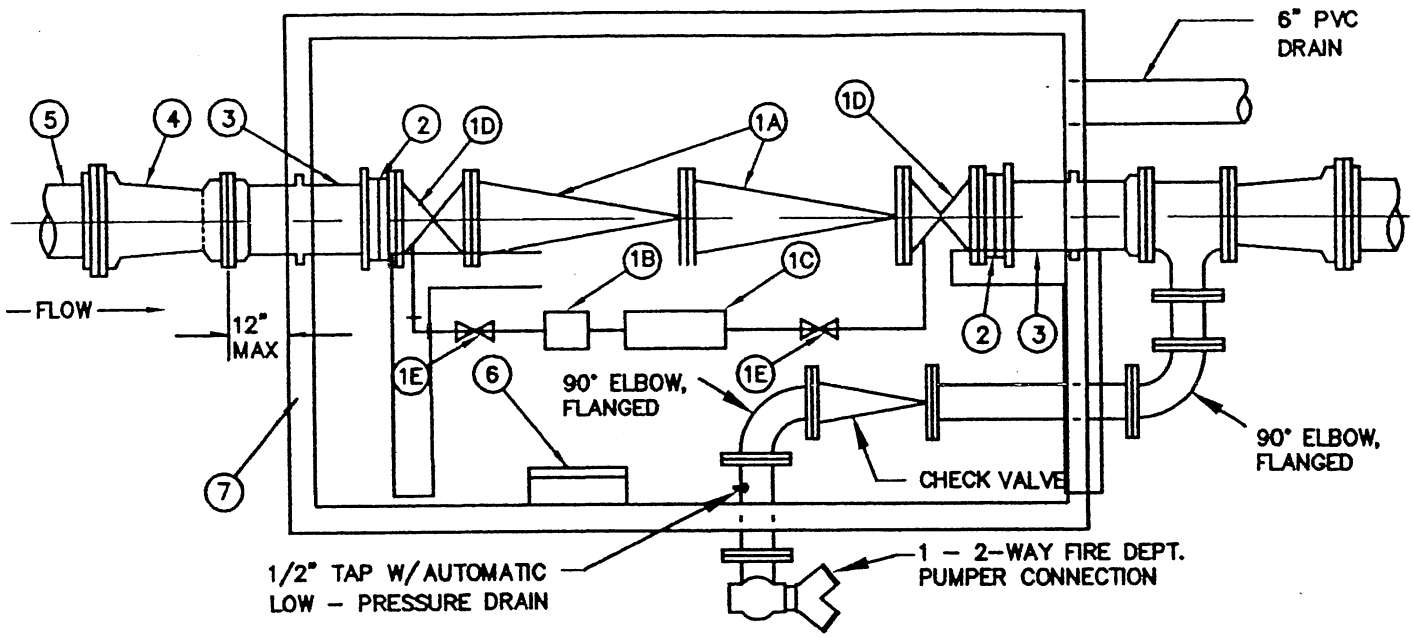

LEGEND

1. DOUBLE-CHECK DETECTOR VALVE ASSEMBLY CAPABLE OF METERING WATER USAGE UNDER LOW FLOW CONDITIONS. 10.0 P.S.I. HEAD LOSS AT 1600 GPM FOR 8" SIZE. ASSEMBLY TO BE STATE DSHS APPROVED. SIZE AS SPECIFIED ON PLANS.
   - 1A. 2 - CHECK VALVES, (FL)
   - 1B. 1 - BY-PASS METER 5/8" X 3/4" SENSUS "GALLON" READING METER COMPLETE WITH SPUD NUT.
   - 1C. 1 - DOUBLE CHECK VALVE ASSEMBLY, (DSHS APPROVED.) 3/4" FOR 8" D.D.C.V.
   - 1D. 2 - GATE VALVES, (FL) W/HAND WHEEL; NON RISING STEM, RESILIENT SEATED AS PER STATE REQUIREMENTS.
   - 1E. 2 - GATE VALVES, (FL) W/ HAND WHEEL; NON-RISING STEM, RESILIENT SEATED AS PER STATE REQUIREMENTS.
2. 2 - FLANGED COUPLING ADAPTER, SIZE AS SPECIFIED ON PLANS. (LOCATE MINIMUM 6" FROM INNER WALL)
3. 2 - PIPE SPOOLS, PLAIN END. SAME SIZE AS SPECIFIED ON PLANS.
4. 1- REDUCER (MJ X MJ), IF REQUIRED. SIZE AS SPECIFIED ON PLANS.
5. WATER MAIN CL52, SIZE AS SPECIFIED ON PLANS.
6. LADDER, LOCATE AS SPECIFIED ON PLANS.
7. UTILITY VAULT CO. VAULTS SHALL BE CITY STD. OF QUALITY; SUBMIT ALTERNATIVES FOR APPROVAL. HINGED AND SPRING LOCKED STEEL DIAMOND P/L COVER 2-332P, (DOUBLE HATCH COVER.) 4" C.I. FLOOR DRAIN INTO 6" PVC DRAIN LINE. DAYLIGHT OR STORM SYSTEM CONNECTION. (NO SUMP PUMPS) CHECK VAULT SIZE REQUIRED FOR ENCLOSING COMPLETE ASSEMBLIES.

MIN. VAULT SIZES:

4"	5106 LA	--	5'-0" X 10'-6" X 6'-3" HIGH
6"	5106 LA	--	5'-0" X 10'-6" X 6'-3" HIGH
8"	612 LA	--	6'-0" X 12'-0" X 6'-6 1/2" HIGH
10"	612 LA	--	6'-0" X 12'-0" X 6'-6 1/2" HIGH

CITY OF LONG BEACH			
DOUBLE-CHECK DETECTOR WITH FIRE CONNECTION			
APPROVED: BY CITY / DATE			DWG. NO. D-CDWFC
DATE: 8/96	DRWN: J.H.	CHKD: T.J.O.	SCALE: NONE

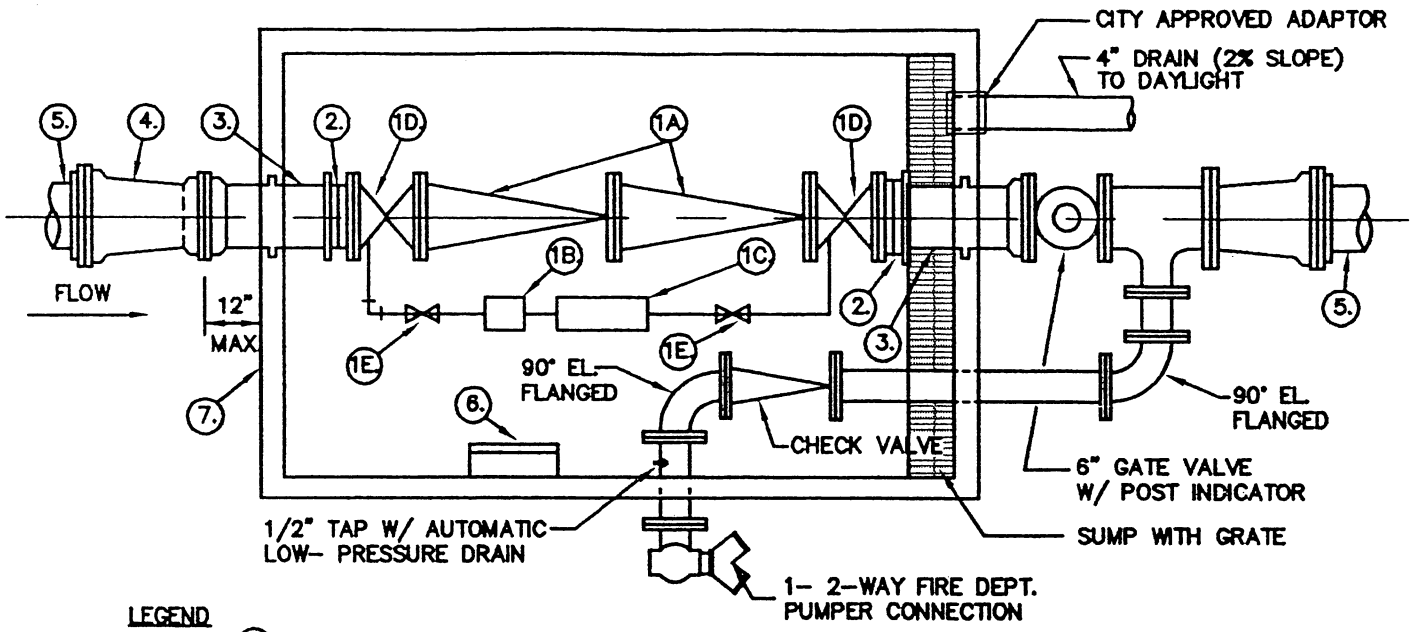

LEGEND

1. DOUBLE-CHECK DETECTOR VALVE ASSEMBLY CAPABLE OF METERING WATER USAGE UNDER LOW FLOW CONDITIONS. 10.0 P.S.I. HEAD LOSS AT 1600 GPM FOR 8" SIZE. ASSEMBLY TO BE STATE DOH APPROVED. SIZE AS APPROVED BY CITY. (SENSUS TOUCH READ)
   - 1A. 2 - CHECK VALVES, (FL)
   - 1B. 1 - BY-PASS METER 5/8" X 3/4" SENSUS (C.F. READING) METER TOUCH READ COMPLETE WITH SPUD NUT.
   - 1C. 1 - DOUBLE CHECK VALVE ASSEMBLY, (DOH APPROVED.) 3/4" FOR 8" D.D.C.V.
   - 1D. 2 - GATE VALVES, (FL) W/HAND WHEEL; RISING STEM, RESILIENT SEATED AS PER CITY REQUIREMENTS.
   - 1E. 2 - GATE VALVES, (FL) W/ HAND WHEEL; RISING STEM, RESILIENT SEATED AS PER CITY REQUIREMENTS.
2. 2 - FLANGED COUPLING ADAPTER, SIZE AS SPECIFIED ON PLANS. (LOCATE MINIMUM 6" FROM INNER WALL)
3. 2 - PIPE SPOOLS, PLAIN END.
4. 1- REDUCER (MJ X MJ), IF REQUIRED.
5. RESTRAINED JOINT WATER MAIN CL50.
6. ALUMINUM (TELESCOPING) LADDER, LOCATE AS DIRECTED BY CITY, USE STAINLESS STEEL FASTNERS AT 3' MAX. SPACING
7. UTILITY VAULT CO. VAULTS SHALL BE CITY STD. OF QUALITY; SUBMIT ALTERNATIVES FOR APPROVAL. HINGED AND SPRING LOCKED STEEL DIAMOND P/L COVER 2-332P, (DOUBLE HATCH COVER.) 4" C.I. FLOOR DRAIN INTO 4" PVC DRAIN LINE. DAYLIGHT OR STORM SYSTEM. (NO SUMP PUMPS) CHECK VAULT SIZE REQUIRED FOR ENCLOSING COMPLETE ASSEMBLIES.
8. PROVIDE GRINNEL PIPE SUPPORTS, TO INCLUDE STEEL YOKE, BOLT TO VAULT FLOOR USING RECOMMENDED CONNECTION AND SIZES.

MIN. VAULT SIZES:

4"	5106 LA	--	5'-0" X 10'-6" X 6'-3" HIGH
6"	5106 LA	--	5'-0" X 10'-6" X 6'-3" HIGH
8"	612 LA	--	6'-0" X 12'-0" X 6'-6 1/2" HIGH
10"	612 LA	--	6'-0" X 12'-0" X 6'-6 1/2" HIGH

NOTE:

1. PAINT ALL PIPING WITH PARKER PAINT MARINE ENAMEL, MARATHON 1065 TAHOE BLUE
2. PROVIDE GRINNELL PIPE SUPPORTS, WHERE REQUIRED. (3 MINIMUM)

CITY OF LONG BEACH			
DOUBLE-CHECK DETECTOR WITH FIRE CONNECTION			
APPROVED: BY CITY / DATE			DWG. NO. DCDFC
DATE: 8/96	DRWN: J.H.	CHKD: T.J.O.	SCALE: NONE

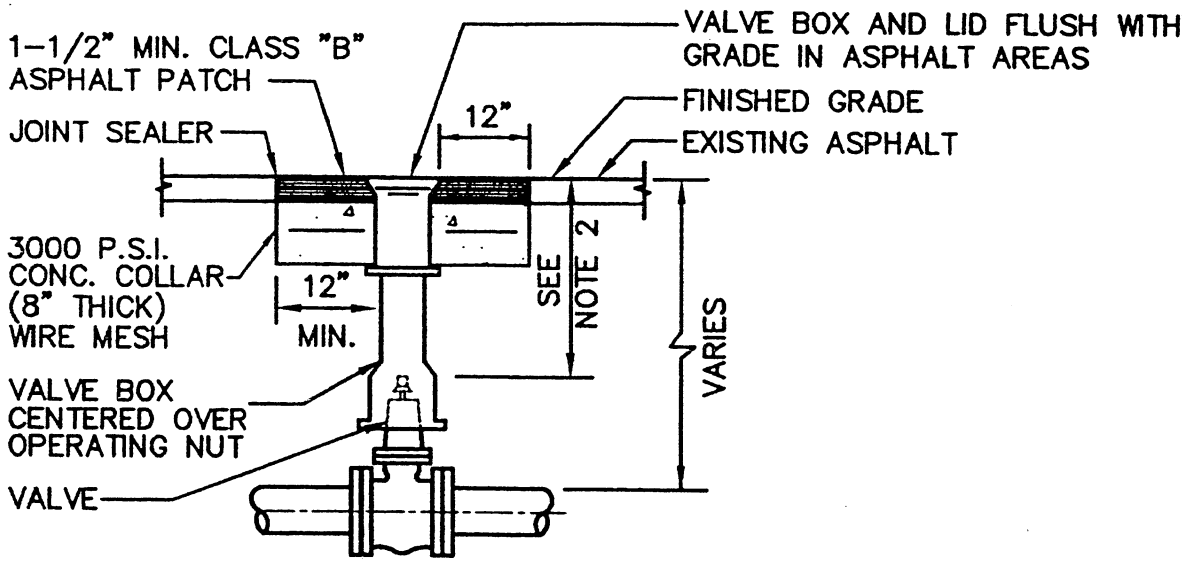

VALVE BOX IN ASPHALT AREA

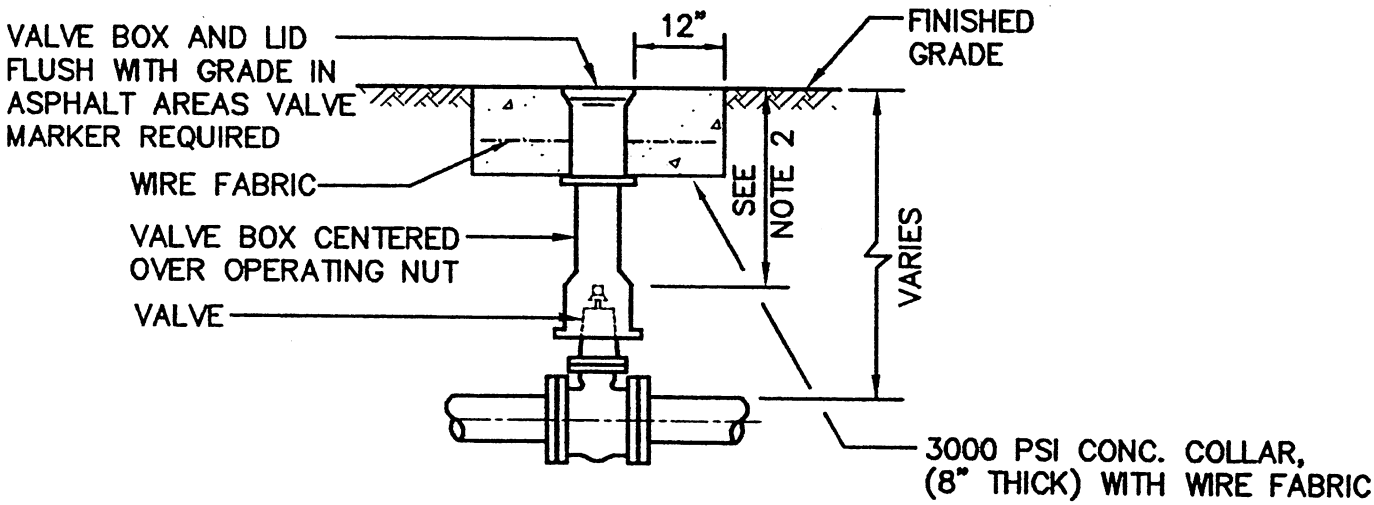

VALVE BOX IN UNIMPROVED AREA

NOTES:

1. EACH VALVE SHALL BE PROVIDED WITH AND ADJUSTABLE CAST IRON VALVE BOX OF 5 INCHES (5") INSIDE DIAMETER. VALVE BOXES SHALL HAVE A TOP SECTION WITH AN EIGHTEEN INCH (18") MIN. LENGTH. THE VALVE BOX SHALL BE RICH No. 940 OR APPROVED EQUAL. VALVE BOX EARS SHALL BE PLACED IN LINE WITH PIPE IT SERVES.

2. 15" MINIMUM, 36" MAXIMUM FOR OPERATOR NUT. EXTENSION MAY BE REQUIRED.

CITY OF LONG BEACH			
VALVE BOX ADJUSTMENT			
APPROVED: BY CITY ____ DATE ____			DWG. NO. VBA
DATE: 8/96	DRWN: J.H.	CHKD: T.J.O.	SCALE: NONE

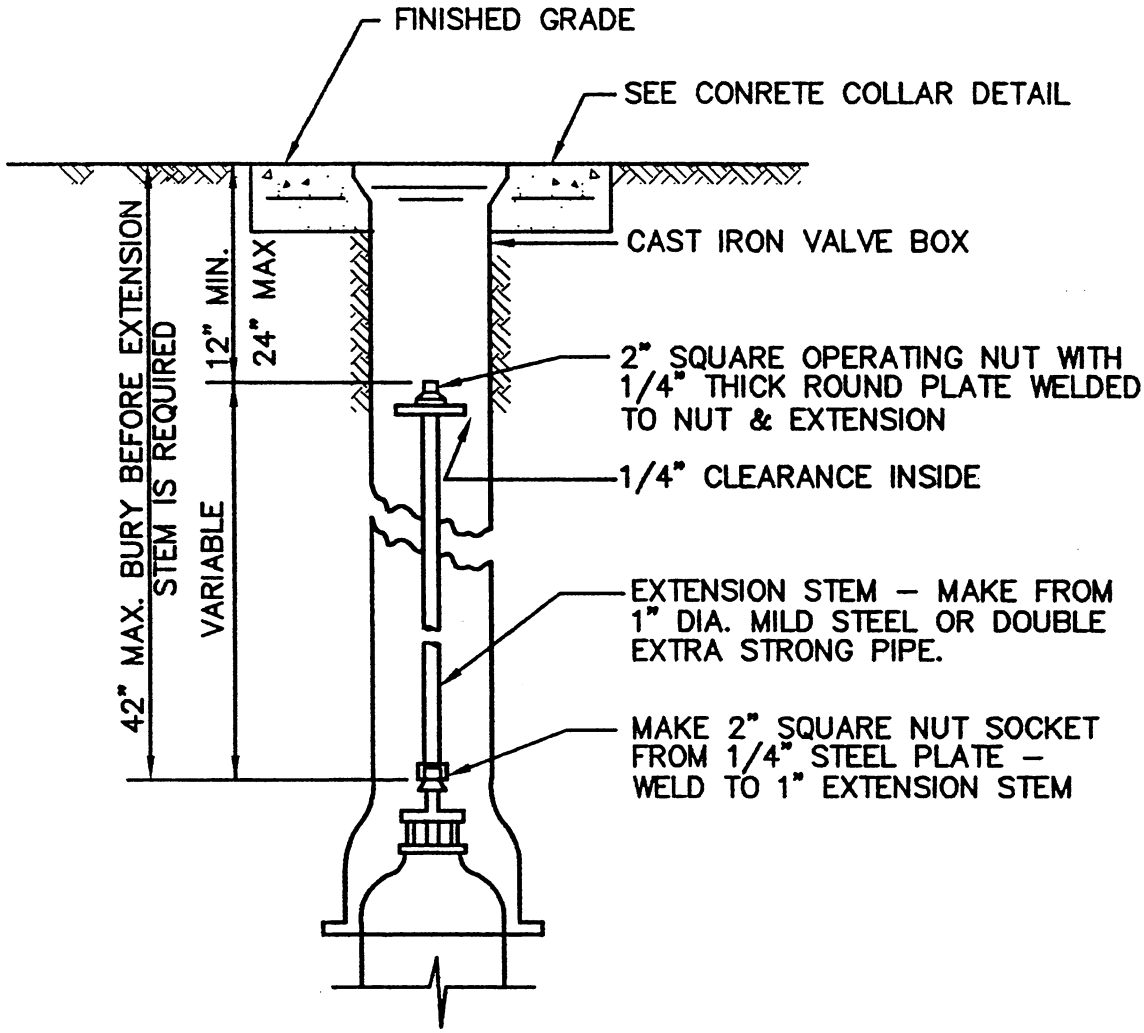

CITY OF LONG BEACH			
VALVE EXTENSION STEM			
APPROVED: BY CITY / DATE			DWG. NO. VES
DATE: 8/96	DRWN: J.H.	CHKD: T.J.O.	SCALE: NONE

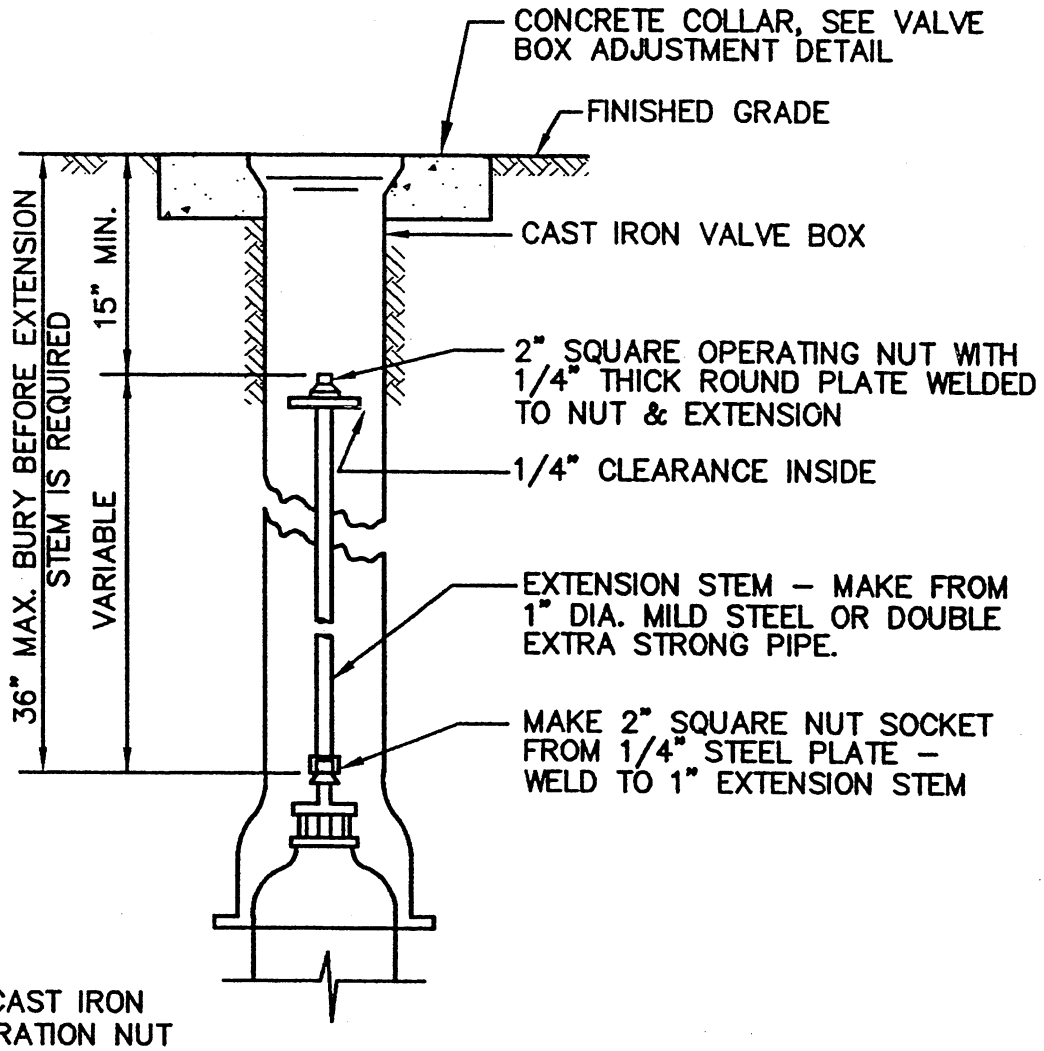

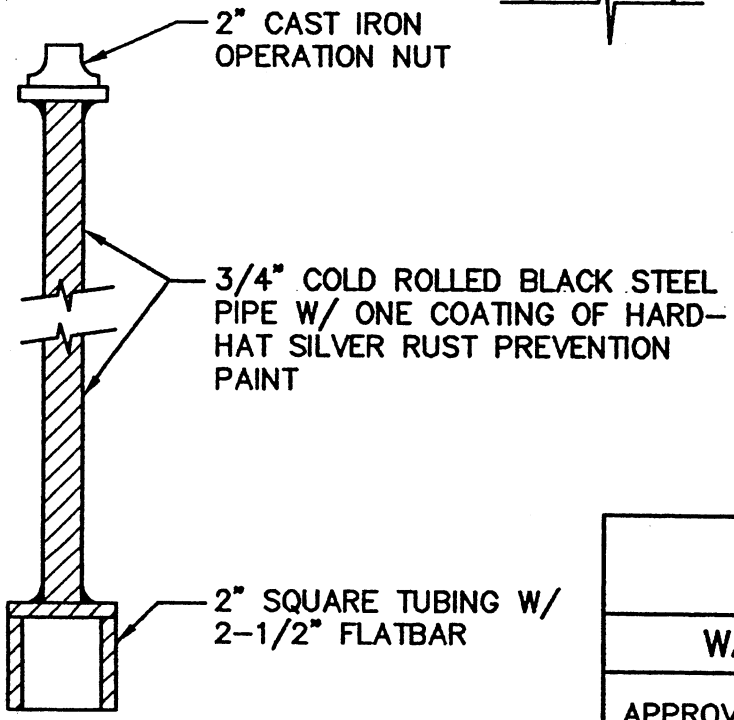

CITY OF LONG BEACH			
WATER VALVE STEM EXTENSION			
APPROVED: BY CITY / DATE			DWG. NO. WVSE
DATE: 8/96	DRWN: J.H.	CHKD: T.J.O.	SCALE: NONE

PRESSURE REDUCING STATION

(TO BE SIZED BY CITY)

LEGEND

1. pressure reducing pressure sustsining valve (FL x FL), Cla-Val with valve support and indicator guage.
2. NRS resilient seat flanged gate valve with handwheel, and valve support assembly.
3. (FL x MJ) adaptor coupling.
4. Pressure gauge 0-200 psi with Ray pressure snubber and shut off cock
5. 2" diameter double strap tapped saddle.
6. Valve extension stem and guide furnish with fork to fit handwheel and 2" opening nut and bracket to hatch side opening. Show detail.
7. Watertight grout for inlet pipe.
8. 2" diameter brass (THD x THD) with pipe support.
9. 2" 90° brass elbow (THD x THD) with pipe support.
10. 2" union.
11. 2" resilient seat gate valve (THD x THD) with pipe support.
12. 2" PRV, Cal-Val No. 90G-01AS with valve support.
13. Utility vault, top section to be spacified and approved by the city.No.4484-TL-36.
14. Utility vault, adjustable cover to be specified and approved by the city.No.4484-AT.
15. Bilco Hatch Co., aluminum access doors H-20 LOADING
16. Utility vault, size to be specified by the city.
17. Utility vault, size to be specified by the city.
18. Grinnel pipe supports, to include steel yoke, bolt to vault floor using recommended connection and sizes.
19. Ladder, bolt at floor and hatch opening.

NOTE:

1. ALL 2" PIPE TO BE BRASS
2. PAINT ALL PIPING WITH PARKER PACIFIC MARINE ENAMEL MARATHON 1065 TAHOE BLUE

CITY OF LONG BEACH			
PRESSURE REDUCING STATION			
APPROVED: BY CITY ____ DATE ____			DWG. NO. PRSNOTE
DATE: 8/96	DRWN: J.H.	CHKD: T.J.O.	SCALE: NONE

PRESSURE REDUCING STATION

(TO BE SIZED BY CITY)

LEGEND

1. pressure reducing pressure sustsining valve (FL x FL), Cla–Val with valve support.
2. NRS resilient seat flanged gate valve with handwheel, and valve support assembly.
3. (FL x MJ) adaptor coupling.
4. Pressure gauge 0–200 psi with snubber and shut off cock
5. 2" diameter double strap tapped saddle.
6. Valve extension stem and guide furnish with fork to fit handwheel and 2" opening nut and bracket to hatch side opening.
7. Watertight grout for inlet pipe.
8. 2" diameter GI(THD x THD) with pipe support.
9. 2" 90° brass elbow (THD x THD) with pipe support.
10. 2" union.
11. 2" resilient seat gate valve (THD x THD) with pipe support.
12. 2" PRV, Cal–Val No. 90G–01AS with valve support.
13. Utility vault, top section to be sized by city.
14. Utility, valt, adjustable cover to be sized by city.
15. Bilco Hatch Co., aluminum access doors H–20 LOADING
16. Utility vault, to be sized by city.
17. Utility vault, to be sized by city.
18. Grinnel pipe supports, to include steel yoke, bolt to valt floor using recommended connection and sizes.
19. Ladder, bolt at floor and hatch opening.
20. Provide min. 4" diameter PVC (SDR35) drain to daylight (min. slope = 2%) or city approved sump pump system as required.

CITY OF LONG BEACH			
PRESSURE REDUCING STATION			
APPROVED: BY CITY ____ DATE ____			DWG. NO. PRSNOTE
DATE: 8/96	DRWN: J.H.	CHKD: T.J.O.	SCALE: NONE

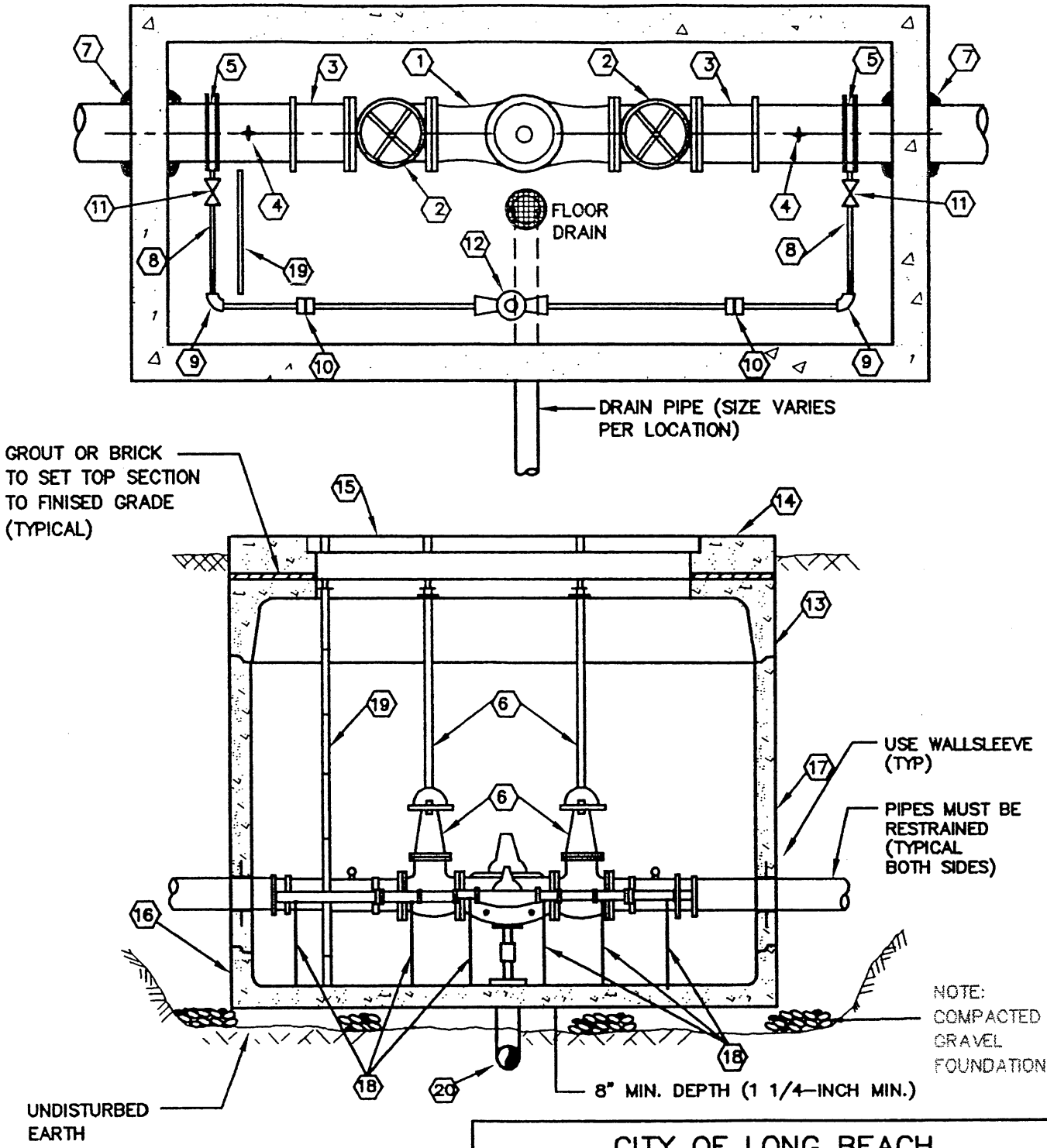

NOTE:
PAINT ALL PIPING WITH PARKER PACIFIC MARINE ENAMEL MARATHON 1065, TAHOE BLUE

CITY OF LONG BEACH			
PRESSURE REDUCING STATION			
APPROVED: BY CITY / DATE			DWG. NO. PRS
DATE: 8/96	DRWN: J.H.	CHKD: T.J.O.	SCALE: NONE

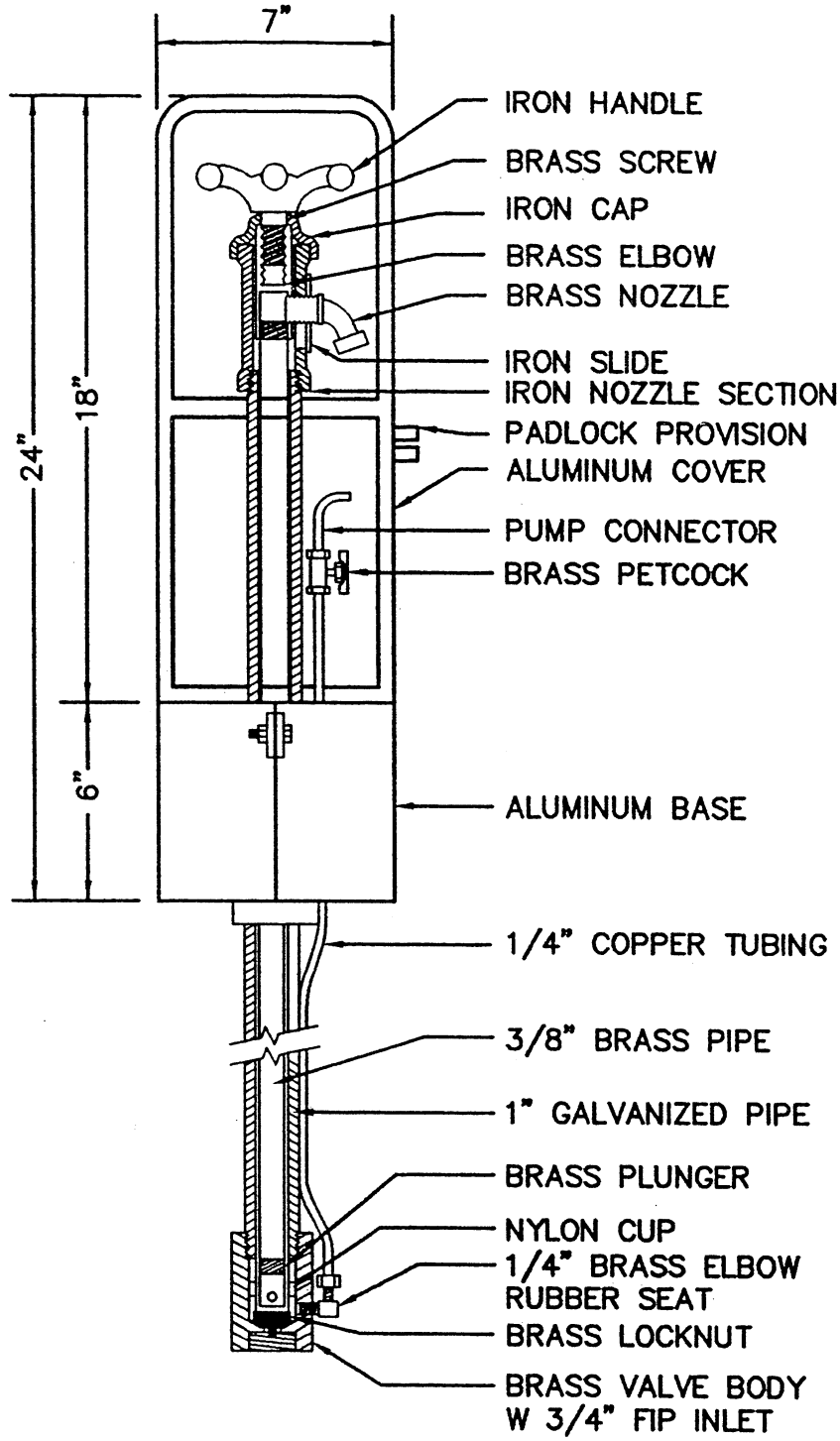

NOTE:

USE FORD S90 BRASS TAPPING SADDLE IF WATER MAIN PIPE IS P.V.C. AND FB100, FB 1101, CORPORATION STOPS AS NECESSARY.

CITY OF LONG BEACH			
WATER SAMPLING STATION			
APPROVED: BY CITY / DATE			DWG. NO. WSSTA-2
DATE: 8/96	DRWN: J.H.	CHKD: T.J.O.	SCALE: NONE

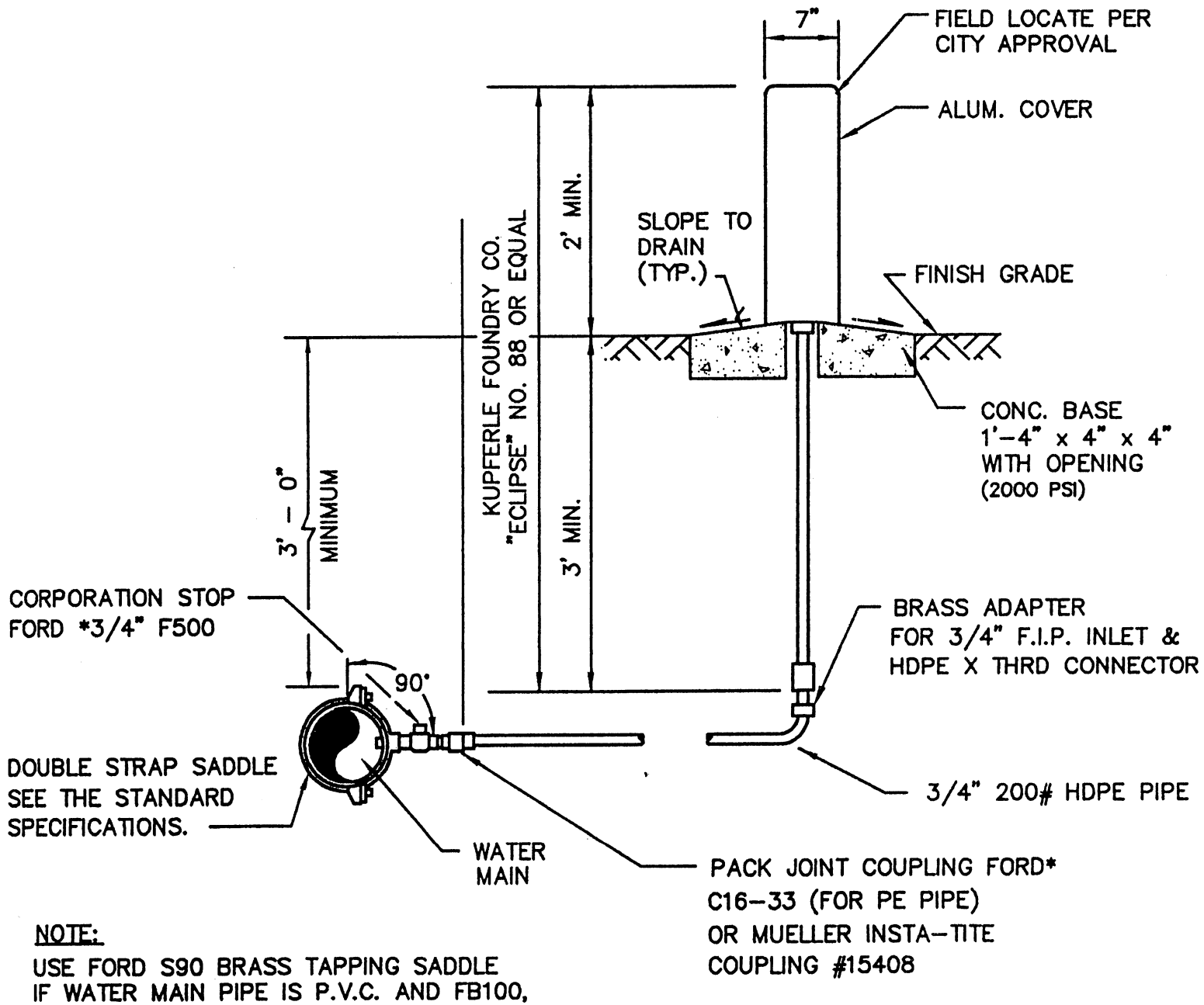

NOTE:
USE FORD S90 BRASS TAPPING SADDLE IF WATER MAIN PIPE IS P.V.C. AND FB100, FB 1101, CORPORATION STOPS AS NECESSARY.

CITY OF LONG BEACH			
WATER SAMPLING STATION			
APPROVED:	BY CITY	DATE	DATE: 8/96
			DRWN: J.H.
			CHKD: T.J.O.
DWG. NO. WSSTA-1			SCALE: NONE

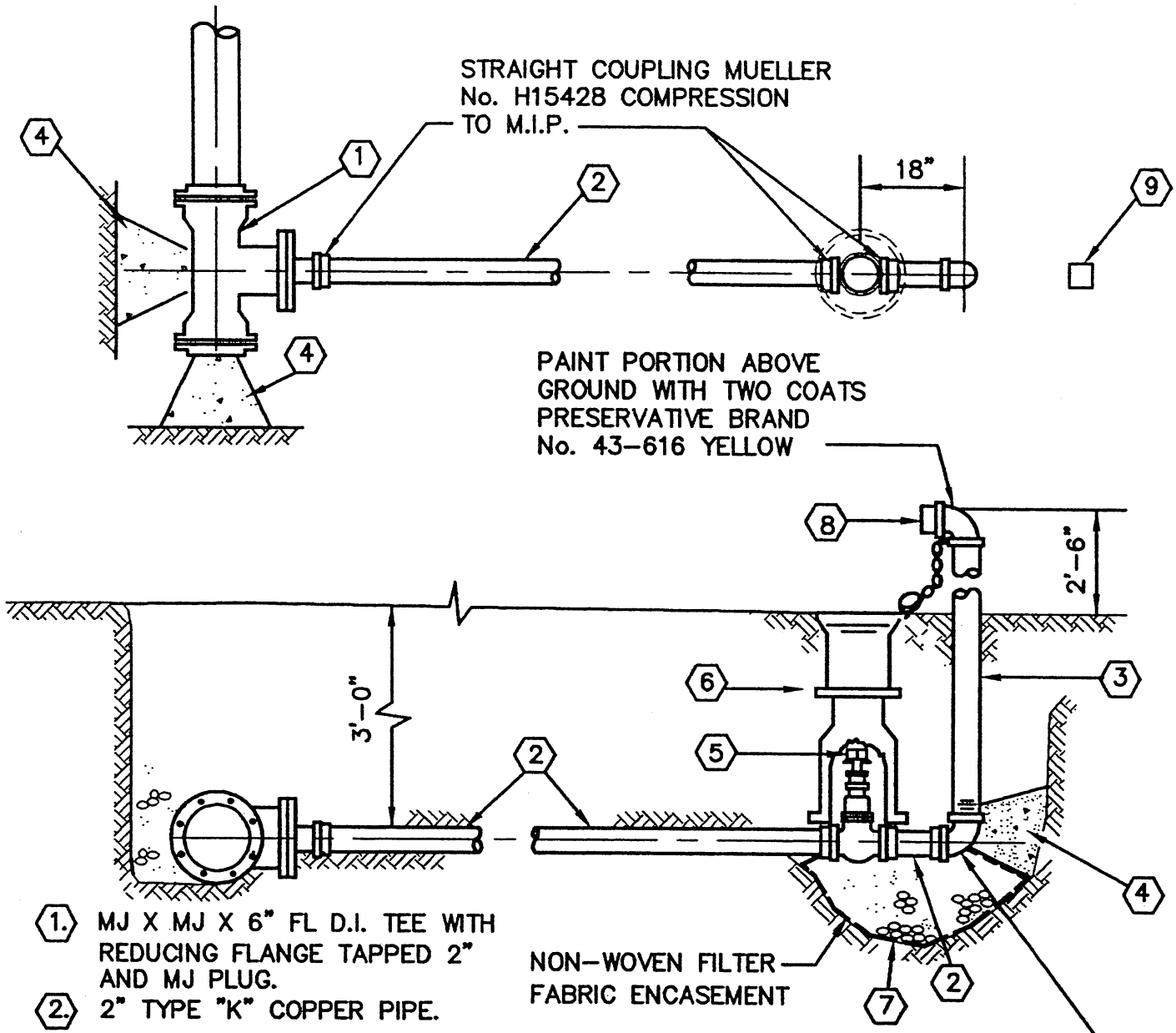

1. MJ X MJ X 6" FL D.I. TEE WITH REDUCING FLANGE TAPPED 2" AND MJ PLUG.
2. 2" TYPE "K" COPPER PIPE.
3. 2" GALVANIZED IRON PIPE.
4. CONCRETE THRUST BLOCK.
5. 2" AWWA RESILIENT SEAT GATE VALVE, THD X THD, WITH OPERATING NUT.
6. CAST IRON VALVE BOX
7. 1/4 CUBIC YARD WASHED GRAVEL POCKET.
8. 2" x 2-1/2" HOSE THREADS BRASS INSERT WITH CAP AND CHAIN
9. VALVE MARKER POST

NOTES

1. TURN NOZZEL TOWARDS ROADSIDE DITCH
2. INSTALL DIELECTRIC COUPLINGS AT DISSIMILAR METALS.
3. TEMPORARY BLOWOFFS INSTALLED FOR FLUSHING WATERMAIN SHALL BE SIZED TO PROVIDE 2.5fps VELOCITY IN MAIN LINE.

CITY OF LONG BEACH			
PERMANENT END-LINE BLOW OFF ASSEMBLY			
APPROVED: BY CITY / DATE			DWG. NO. PELBOA
DATE: 8/96	DRWN: J.H.	CHKD: T.J.O.	SCALE: NONE

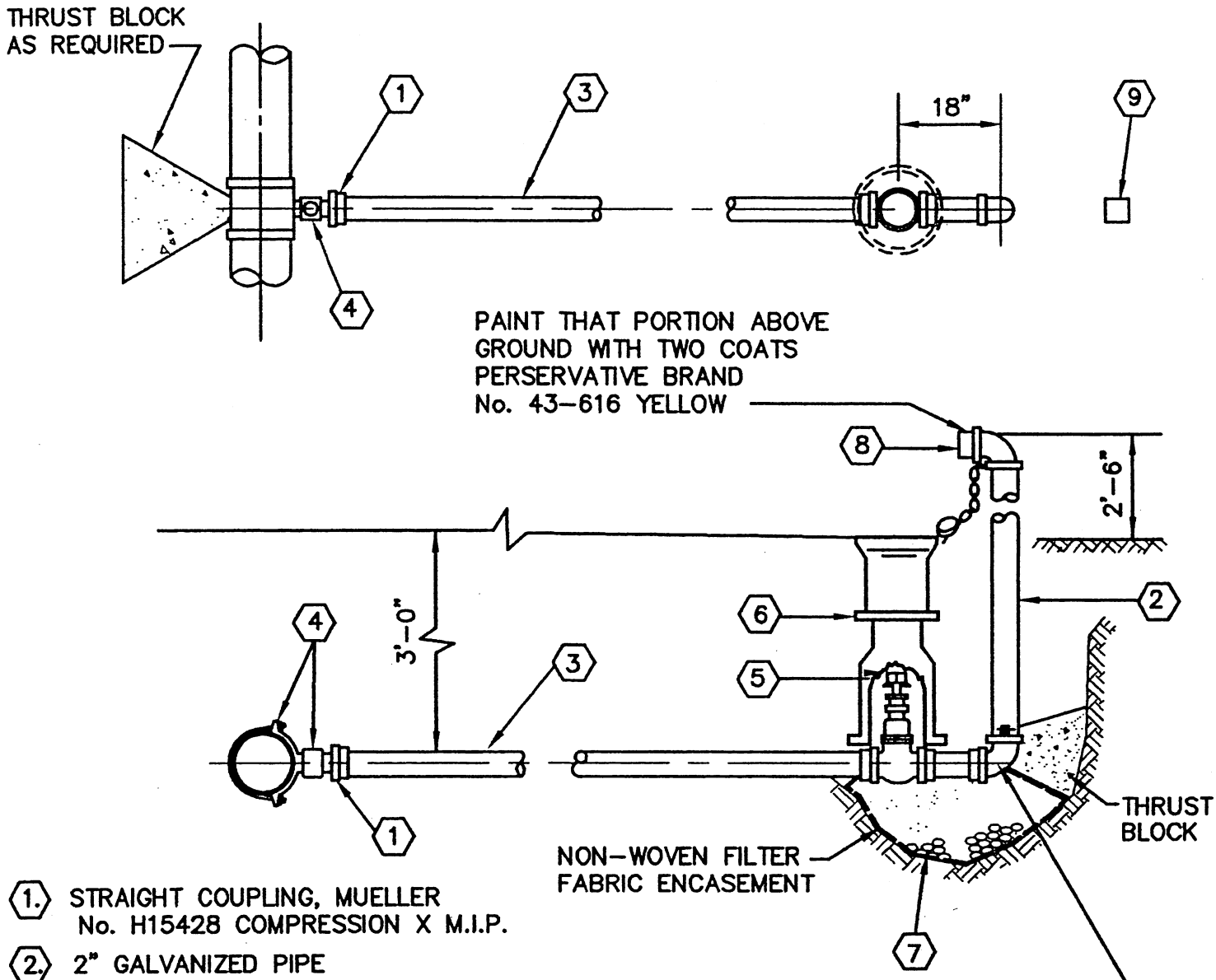

1. STRAIGHT COUPLING, MUELLER No. H15428 COMPRESSION X M.I.P.
2. 2" GALVANIZED PIPE
3. 2" TYPE "K" COPPER PIPE
4. DOUBLE STRAP SADDLE TO FIT
5. 2" AWWA RESILIENT SEAT GATE VALVE THD X THD, WITH OPERATING NUT.
6. CAST IRON VALVE BOX
7. 1/4 CUBIC YARD WASHED GRAVEL POCKET.
8. 2" x 2-1/2" HOSE THREADS BRASS INSERT WITH CAP AND CHAIN
9. VALVE MARKER POST

NOTES:
1. TURN NOZZEL TOWARDS ROADSIDE DITCH
2. INSTALL DIELECTRIC COUPLINGS AT DISSIMILAR METALS.
3. TEMPORARY BLOWOFFS INSTALLED FOR FLUSHING WATERMAIN SHALL BE SIZED TO PROVIDE 2.5fps VELOCITY IN MAIN LINE.

CITY OF LONG BEACH			
PERMANENT IN-LINE BLOW OFF ASSEMBLY			
APPROVED: BY CITY / DATE			DWG. NO. PILBOA
DATE: 8/96	DRWN: J.H.	CHKD: T.J.O.	SCALE: NONE

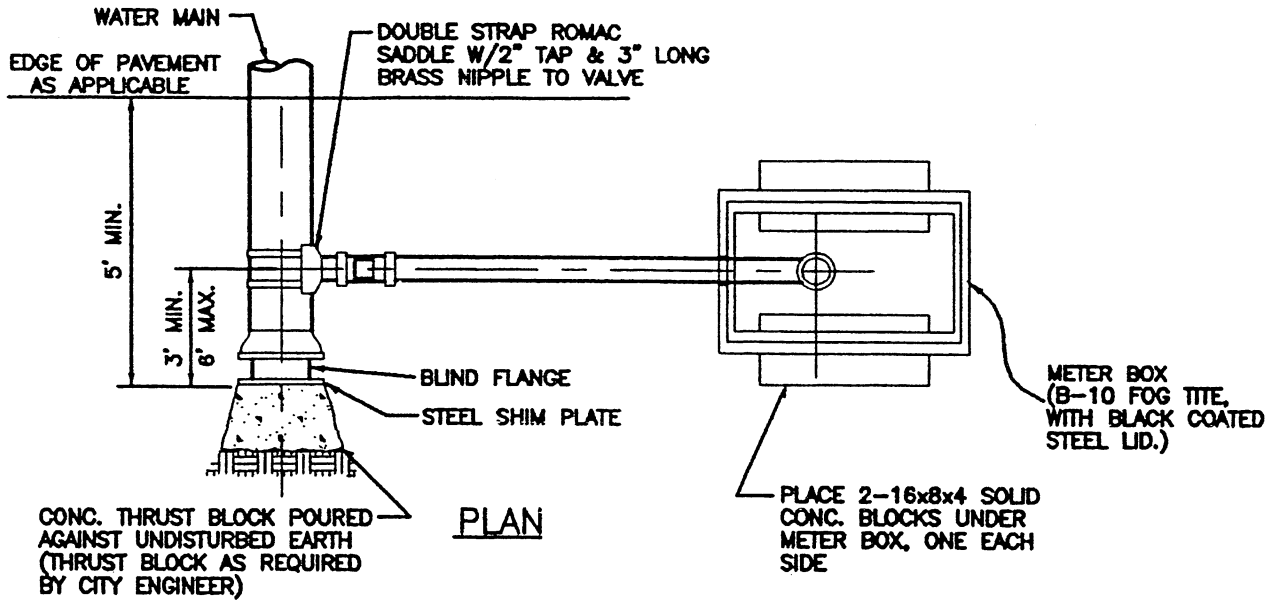

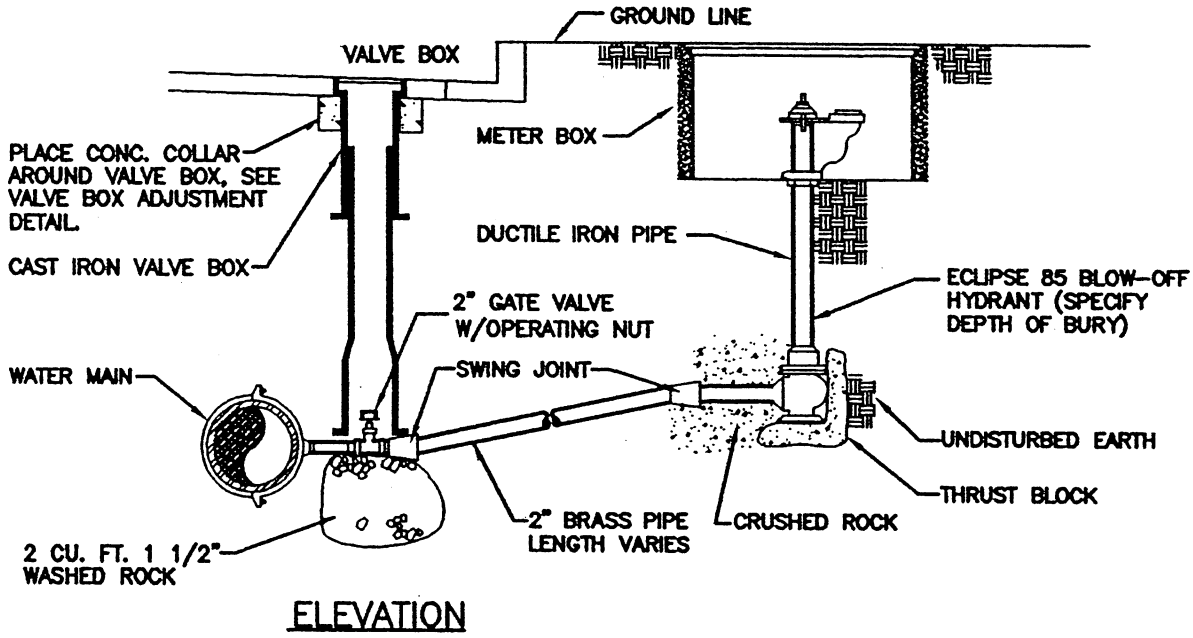

BLOW-OFF HYDRANTS SHALL BE NON-FREEZING, SELF-DRAINING TYPE.

1. SET UNDERGROUND IN CITY APPROVED METER BOX, THESE HYDRANTS WILL BE FURNISHED WITH A 2" FIP INLET, A NON-TURNING OPERATING ROD, AND SHALL OPEN TO THE DESIGN, AND BE SERVICEABLE FROM ABOVE GRADE WITH NO DIGGING.
2. THE OUTLET SHALL ALSO BE BRONZE AND BE 2-1/2" NST.
3. HYDRANTS SHALL BE LOCKABLE TO PREVENT UNAUTHORIZED USE.

(SPECIFY OVERALL LENGTH 6" SHORTER THAN NORMAL DEPTH OF BURY. MINIMUM OPENING IN METER BOX SHALL BE 10".)

CITY OF LONG BEACH			
2" BLOW-OFF ASSEMBLY			
APPROVED: BY CITY / DATE			DWG. NO. BOA
DATE: 8/96	DRWN: J.H.	CHKD: T.J.O.	SCALE: NONE

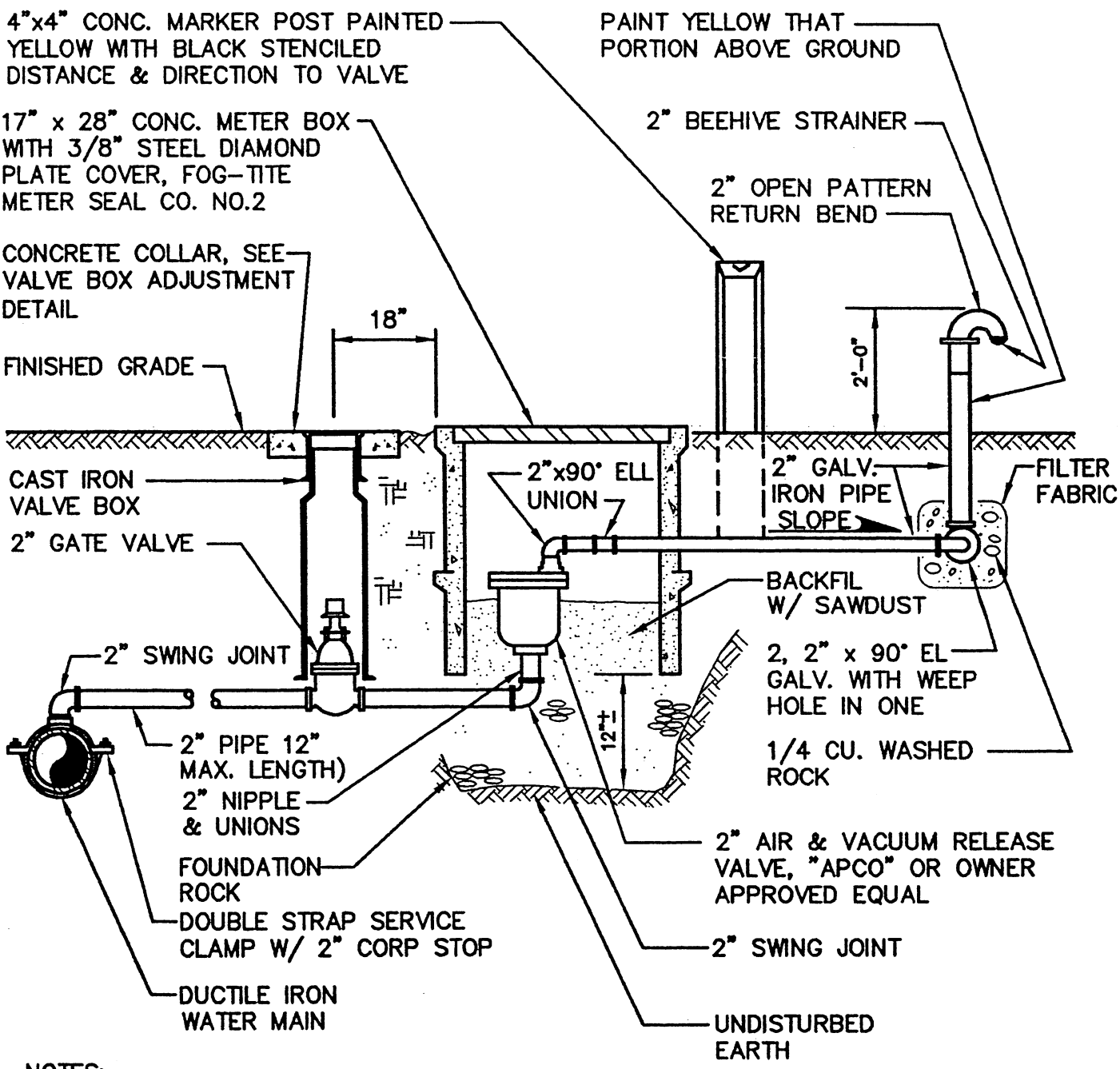

NOTES:

1. GATE VALVE: AWWA RESILIENT SEAL, THRD x THRD WITH OPERATING NUT
2. ALL PIPING BETWEEN DOUBLE STRAP SADDLE AND INLET SIDE OF COMBINATION AIR & VAC ASSEMBLY SHALL BE BRASS
3. TAP MAIN AT SYSTEM HIGH POINT. LOCATION TO BE APPROVED BY THE CITY
4. PAINT PORTION ABOVE GROUND WITH TWO COATS PRESERVATIVE BRAND No. 43-616 YELLOW

CITY OF LONG BEACH			
AIR & VACUUM RELEASE ASSEMBLY			
APPROVED: BY CITY / DATE			DWG. NO. AVRA1
DATE: 8/96	DRWN: J.H.	CHKD: T.J.O.	SCALE: NONE

MATERIAL LIST

1. 2-FLEX CPLG TO FIT ROCKWELL 441 (4" X 3" REDUCER, M.J. FOR 3" METER
2. 2-DOUBLE STRAP SERVICE CLAMPS, ROMAC 101 WITH IPS TAP, OR EQUAL
3. 3-STRAIGHT CPLG. BRASS TO OUTSIDE I.P. THREAD MUELLER H-15425,H-15428 110 COMP., OR EQUAL
4. 1 1/4" BEND CPLG BRASS TO BRASS MUELLER H-15525.
5. 1 1/4" BEND CPLG, BRASS TO OUTSIDE I.P. THREAD MUELLER H-15530, OR EQUAL.
6. 1 BALL VALVE WITH PADLOCK WING OR LOCK CAP, FORD B21-444W OR B21-666 WITH LOCK CAP OR B21-777 WITH LOCK CAP.
7. 2-RESILIENT SEAT GATE VALVE, FL X FL, (RISING STEM)
8. 1-3" TO 10" COMPOUND METER ("SENSUS" TOUCH READ) - SIZE TO BE AS SPECIFIED BY CITY AND FURNISHED BY CONTRACTOR/DEVELOPER
9. 1 C.I. ADPT. FL X PE (LENGTH TO FIT)
10. 1-CPLG. ADAPT., FL ROCKWELL 912, OR OWNER APPROVED EQUAL
11. CAST IN PLACE OR PRECAST CONCRETE VAULT WITH (H20) BILCO (HATCH SIZE AND LOCATION TO BE APPROVED BY CITY)
12. WELDED FL RESTRAINT OR SHAKLE TO THRUST BLOCK TO PREVENT MOVEMENT IF METER IS REMOVED
13. INSULATED CPLG. TO 3" CU SERVICE.
14. UNION
15. INSTALL ALUMINUM LADDER WITH TELESCOPIC RISER FASTEN TO WALL WITH STAINLESS STEEL FASTENER AT MAXIMUM THREE FOOT INTERVALS.
16. PROVIDE 4" DRAIN PIPE TO DAYLIGHT (MIN. SLOPE = 2%) OR CITY APPROVED SUMP PUMP SYSTEM AS REQUIRED.

CITY OF LONG BEACH			
METER AND METER VAULT ASSEMBLY 3" THROUGH 10"			
APPROVED: BY CITY / DATE			DWG. NO. MMVAT
DATE: 8/96	DRWN: J.H.	CHKD: T.J.O.	SCALE: NONE

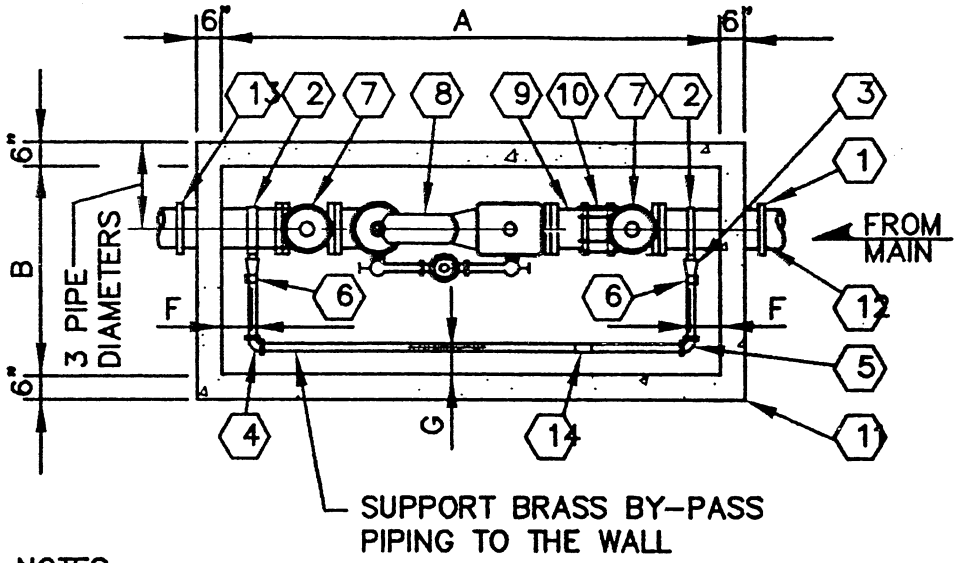

NOTES

1. "SENSUS" METERS (3" TO 10") SHALL BE FURNISHED BY CONTRACTOR AND SIZED BY CITY. METERS SHALL READ IN CUBIC FEET.
2. VAULT SHALL BE PRECAST, UTILITY VAULT OR OWNER APPROVED EQUAL
3. ALL PIPE & FITTINGS 4" AND LARGER SHALL BE CEMENT LINED.
4. PIPING FROM MAIN TO VAULT SHALL BE AS SHOWN IN TABLE BELOW. PROVIDE TEE WITH VALVE ON DISTRIBUTION MAIN.
5. ALL PIPING SHALL BE PAINTED (TWO COATS) WITH PARKER PAINT MARINE ENAMEL, MARATHON 1065, TAHOE BLUE.

METER SIZE	MAIN-LINE	BYPASS	A	B	C	D	E	F	G
3"	4" DI.	1 1/2" BRASS	7'-6"	3'-0"	9 1/2"	6"	2'-8"	9"	4"
4"	4" DI.	1 1/2" BRASS	7'-6"	3'-0"	9 1/2"	6"	2'-8"	9"	4"
6"	6" DI.	2" BRASS	9'-6"	3'-6"	12"	6"	2'-8"	9"	4"
8"	8" DI.	4" DI.	11'-0"	4'-0"	12"	9"	3'-6"	14"	6"
10"	10" DI.	4" DI.	13'-0"	5'-0"	16"	12"	4'-0"	16"	6"

CITY OF LONG BEACH			
METER AND METER VAULT ASSEMBLY 3" THROUGH 10"			
APPROVED: BY CITY / DATE			DWG. NO. MMVAT
DATE: 8/96	DRWN: J.H.	CHKD: T.J.O.	SCALE: NONE

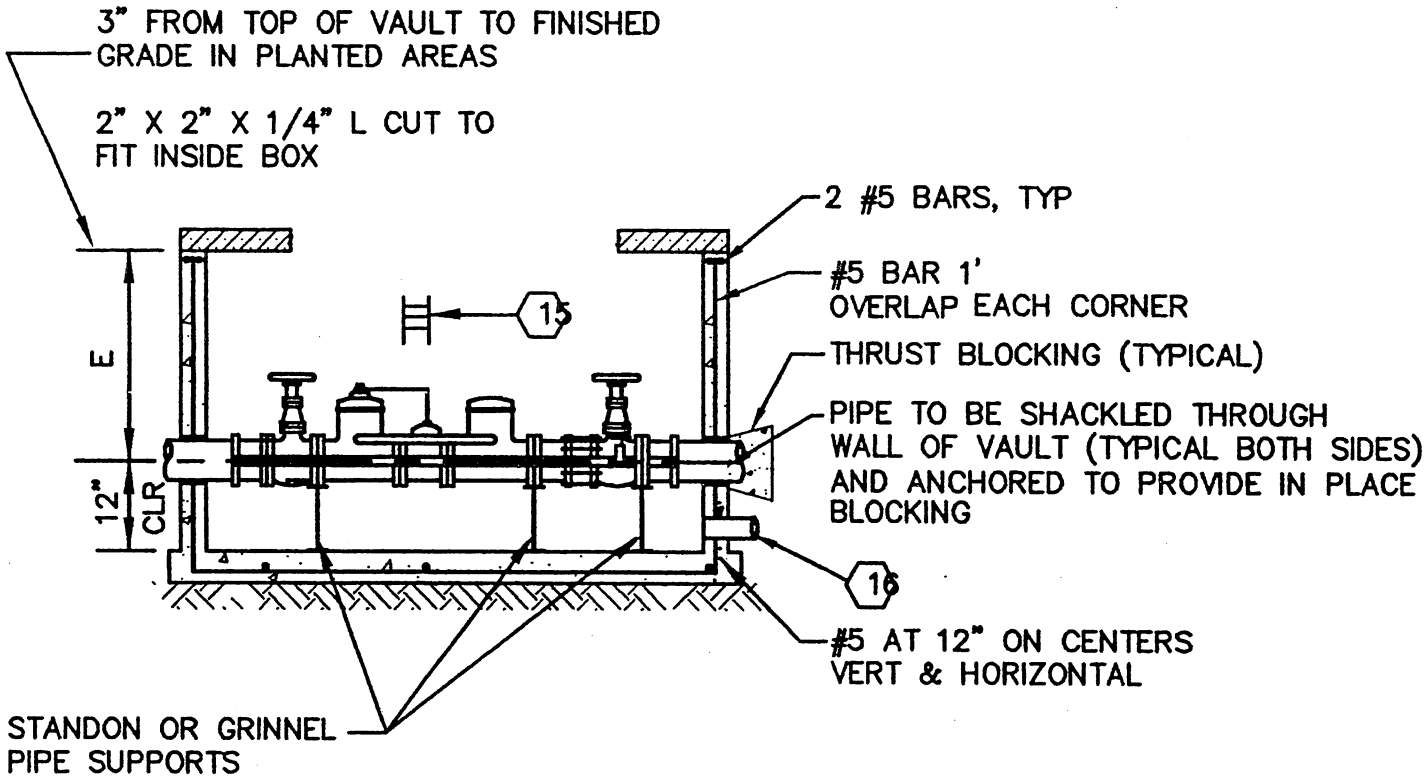

NOTES:

INSTALL 4" DRAIN PIPE TO DAYLIGHT UNLESS OTHERWISE APPROVED. 1% MIN. SLOPE.

BACKFLOW PREVENTOR REQUIRED FOR ALL FIRE LINES AND IRRIGATION LINES, IN SEPERATE VAULTS

BRASS DOES NOT NEED TO BE PAINTED, ALL OTHER PIPE TO BE PAINTED WITH MARINE ENAMEL, MARATHON 1065 TAHOE BLUE.

CITY OF LONG BEACH			
METER AND METER VAULT ASSEMBLY 3" THROUGH 10"			
APPROVED: BY CITY / DATE			DWG. NO. MMVAT
DATE: 8/96	DRWN: J.H.	CHKD: T.J.O.	SCALE: NONE

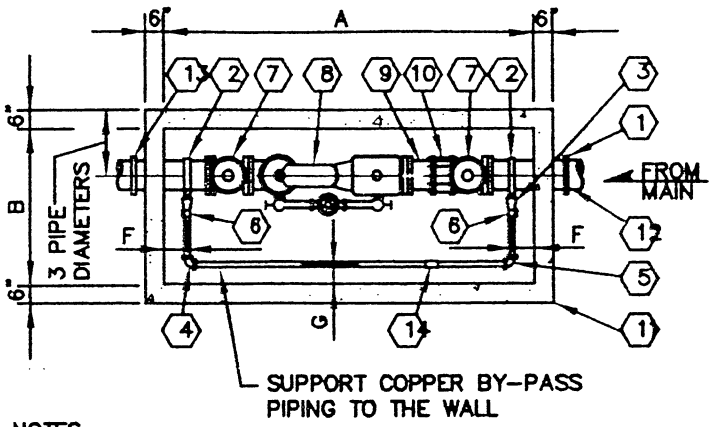

MATERIAL LIST – COPPER BY-PASS

1. 2–FLEX CPLG TO FIT ROCKWELL 441 (4" X 3" REDUCER, M.J. FOR 3" METER
2. 2–DOUBLE STRAP SERVICE CLAMPS, ROMAC 101 WITH IPS TAP, OR EQUAL
3. 3–STRAIGHT CPLG. COPPER TO OUTSIDE I.P. THREAD MUELLER H–15425,H–15428 110 COMP., OR EQUAL
4. 1 1/4" BEND CPLG COPPER TO COPPER MUELLER H–15525.
5. 1 1/4" BEND CPLG, COPPER TO OUTSIDE I.P. THREAD MUELLER H–15530, OR EQUAL.
6. 1 BALL VALVE WITH PADLOCK WING OR LOCK CAP, FORD B21–444W OR B21–666 WITH LOCK CAP OR B21–777 WITH LOCK CAP.
7. 2–RESILIENT SEAT GATE VALVE, FL X FL (RISING STEM)
8. 1–3" TO 10" METER AS SPECIFIED BY CITY SHALL BE FURNISHED BY CONTRACTOR.
9. 1 C.I. ADPT. FL X PE LENGTH TO FIT
10. 1–CPLG. ADAPT., FL ROCKWELL 912, OR EQUAL
11. CAST IN PLACE OR PRECAST CONCRETE VAULT WITH (H20) BILCO HATCH) (OR OWNER APPROVED)
12. WELDED FL RESTRAINT OR SHAKLE TO THRUST BLOCK TO PREVENT MOVEMENT IF METER IS REMOVED
13. INSULATED CPLG. TO 3" CU SERVICE.
14. UNION

NOTES

1. METERS 3" – 10" BY CONTRACTOR, READ IN CUBIC FEET.
2. VAULT SHALL BE PRECAST, UTILITY VAULT OR OWNER APPROVED EQUAL
3. ALL PIPE & FITTINGS 4" AND LARGER SHALL BE CEMENT LINED.
4. PIPING FROM MAIN TO VAULT SHALL BE 4" ON 3" METER INSTALLATION, TEE WITH VALVE ON EXISTING MAIN REQUIRED.

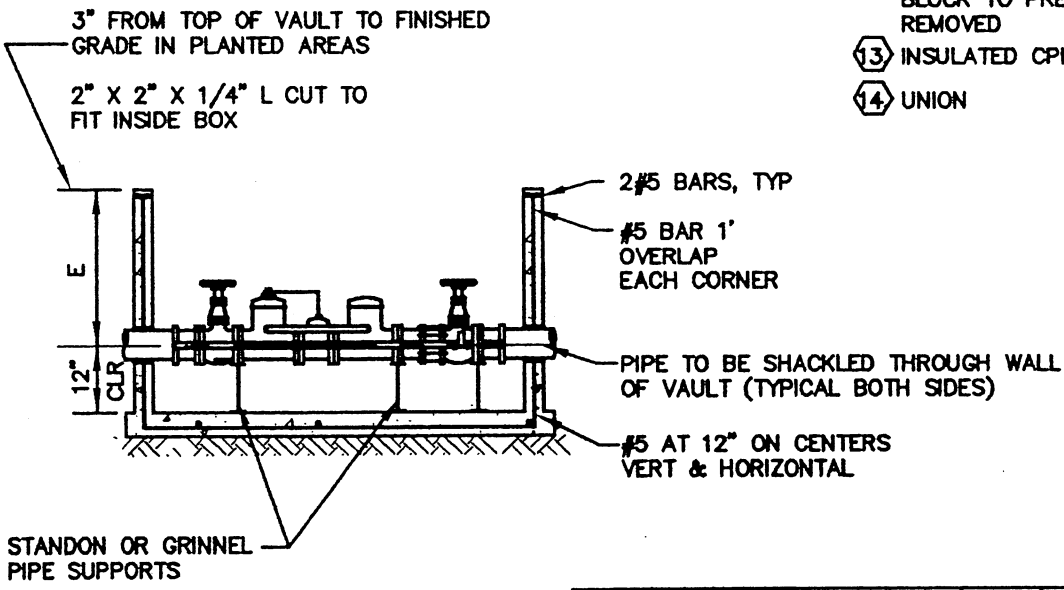

METER SIZE	MAIN–LINE	BYPASS	A	B	C	D	E	F	G
3"	4" DI.	1 1/2" BRASS	7'–6"	3'–0"	9 1/2"	6"	2'–8"	9"	4"
4"	4" DI.	1 1/2" BRASS	7'–6"	3'–0"	9 1/2"	6"	2'–8"	9"	4"
6"	6" DI.	2" BRASS	9'–6"	3'–6"	12"	6"	2'–8"	9"	4"
8"	8" DI.	4" DI.	11'–0"	4'–0"	12"	9"	3'–6"	14"	6"
10"	10" DI.	4" DI.	13'–0"	5'–0"	16"	12"	4'–0"	16"	6"

NOTES:

INSTALL 4" DRAIN PIPE TO DAYLIGHT UNLESS OTEHRWISE APPROVED. 1% MIN. SLOPE.

BACKFLOW PREVENTOR REQUIRED FOR ALL FIRE LINES AND IRRIGATION LINES, IN SEPERATE VAULTS

BRASS DOES NOT NEED TO BE PAINTED, ALL OTHER PIPE TO BE PAINTED WITH MARINE ENAMEL, MARATHON 1065 TAHOE BLUE.

OUTLET PIPES TO BE RESTRAINED (TYP)

CITY OF LONG BEACH

METER AND METER VAULT ASSEMBLY 3" THROUGH 10"

APPROVED:

BY CITY

DATE

DWG. NO. MMVA

DATE:	DRWN:	CHKD:	SCALE:
8/96	J.H.	T.J.O.	NONE

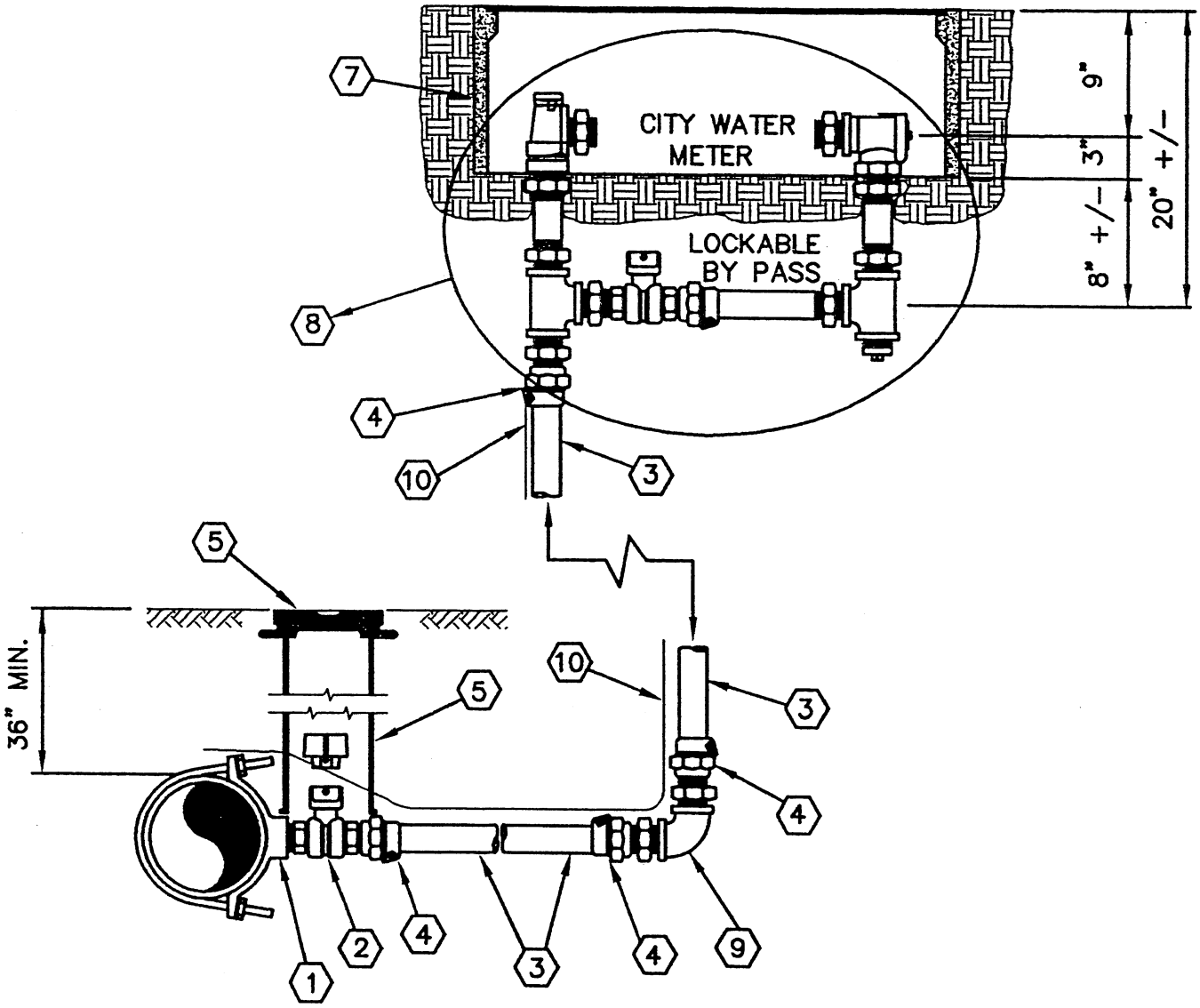

DESCRIPTION	MAKER OR RATING	1-1/2"	2"
1. Double Strap Saddle	Romac or Equal	202 IPT	202 IPT
2. Ball Valve w/ 2" Operating Nut	Ford or equal	B11-666 w/Qt67	B11-777 w/Qt67
3. Pipe – Soft Copper Tubing , Type K	ASTM B-88		
4. Coupling Male	Ford or Equal	C84-66	C84-77
5. Valve Box	Rich or Equal		
6. Nipple Brass		1-1/2" x 6"	2" x 6"
7. Meter Box	Carson or Equal	1324-15L	1324-15L
8. Meter Setter w/Lockable Bypass	Ford or Equal	VFH 66-12 B	VFH 77-12 B
9. Brass 90° Elbow		1-1/2"	2"
10. Tracer Wire	14 Gauge Copper Wire	Solid	Solid

CITY OF LONG BEACH			
1-1/2" & 2" WATER SERVICE			
APPROVED: BY CITY / DATE			DWG. NO. WS2
DATE: 8/96	DRWN: J.H.	CHKD: T.J.O.	SCALE: NONE

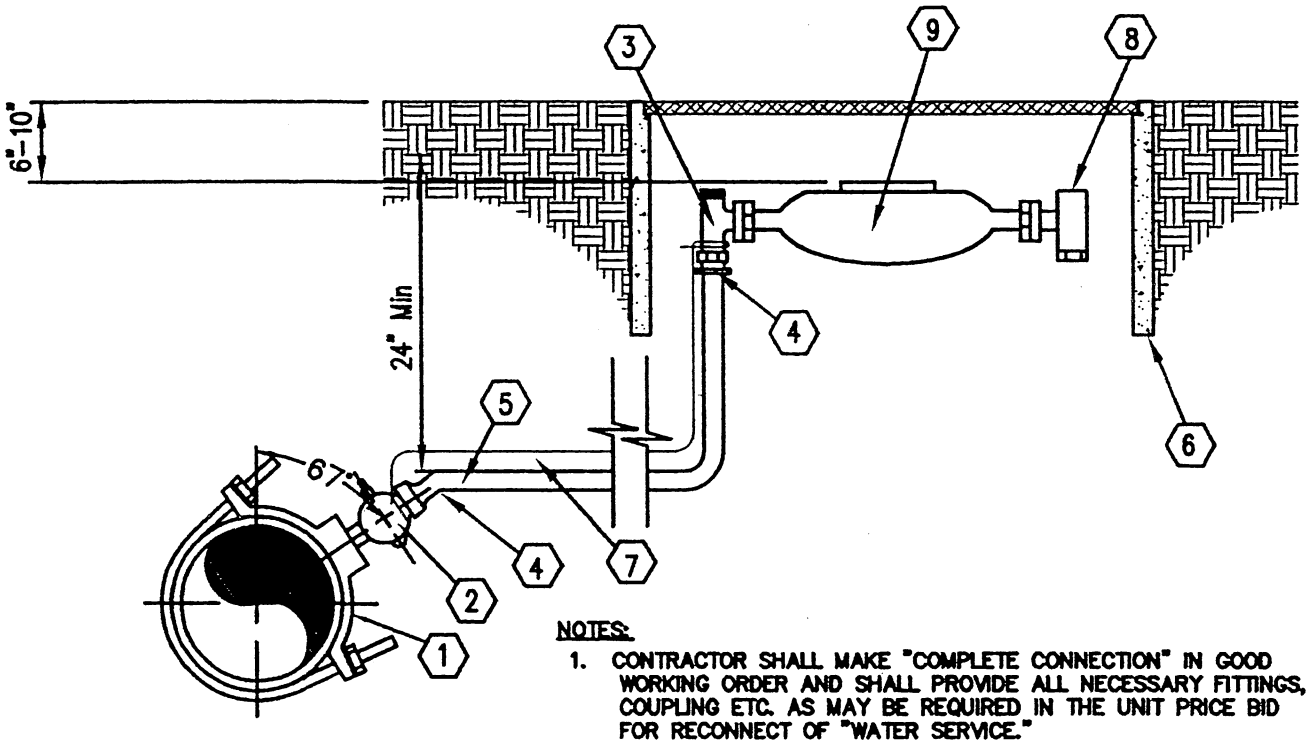

NOTES:

1. CONTRACTOR SHALL MAKE "COMPLETE CONNECTION" IN GOOD WORKING ORDER AND SHALL PROVIDE ALL NECESSARY FITTINGS, COUPLING ETC. AS MAY BE REQUIRED IN THE UNIT PRICE BID FOR RECONNECT OF "WATER SERVICE."
2. CONTRACTOR TO NOTIFY THE CITY OF ANY EXISTING DAMAGED METER BOXES PRIOR TO ANY EXCAVATION FOR THESE SERVICE CONNECTIONS. ANY DAMAGE AS A RESULT OF THE CONTRACTORS WORK SHALL RESULT IN NEW METER BOXES OF EQUAL TYPE AND MATERIAL, TO BE INSTALLED AT THE CONTRACTOR'S EXPENSE
3. ANY DAMAGE DONE TO EXISTING METERS AS A RESULT OF THE CONTRACTOR'S OPERATIONS SHALL BE REPAIRED BY THE CITY'S PERSONNEL AND ALL COSTS OF REPAIR OR REPLACEMENT, IF NECESSARY, SHALL BE DEDUCTED FROM MONIES DUE THE CONTRACTOR.
4. ALL FITINGS MUST BE BRASS
5. TRACER WIRE FROM MAIN TO SERVICE METER MUST BE INSTALLED IN ALL INSTALLATIONS. WIRE MUST BE VISIBLE IN SERVICE METER BOX.

DESCRIPTION	MAKER OR TYPE	3/4"	1"
1. Single Strap Saddle	Romac or Equal	101 IPT	101 IPT
2. Corp Stop	Ford or Equal	f-1101 IPT X Pack Joint	f-1101 IPT X Pack Joint
3. Angle Stop	Ford or Equal	KV43-332W	KV43-444W
4. Inserts	Ford or Equal	#71 Stainless Steel	#72 Stainless Steel
5. Plastic Pipe	Polyethylene ASTM D2239	IPS-SDR-7(PE3406)	IPS-SDR-7(PE3406)
6. Meter Box	Carson or Equal	1419	1419
7. Tracer Wire	Cu Solid Wire	14 Guage	14 Guage
8. Check Valve	CITY APPROVED	City to Install	City to Install
9. Meter	CITY APPROVED	City to Install	City to Install

CITY OF LONG BEACH

3/4" & 1" WATER SERVICE

APPROVED:

BY CITY _____ DATE _____

DWG. NO. WS1

DATE:	DRWN:	CHKD:	SCALE:
8/96	J.H.	T.J.O.	NONE

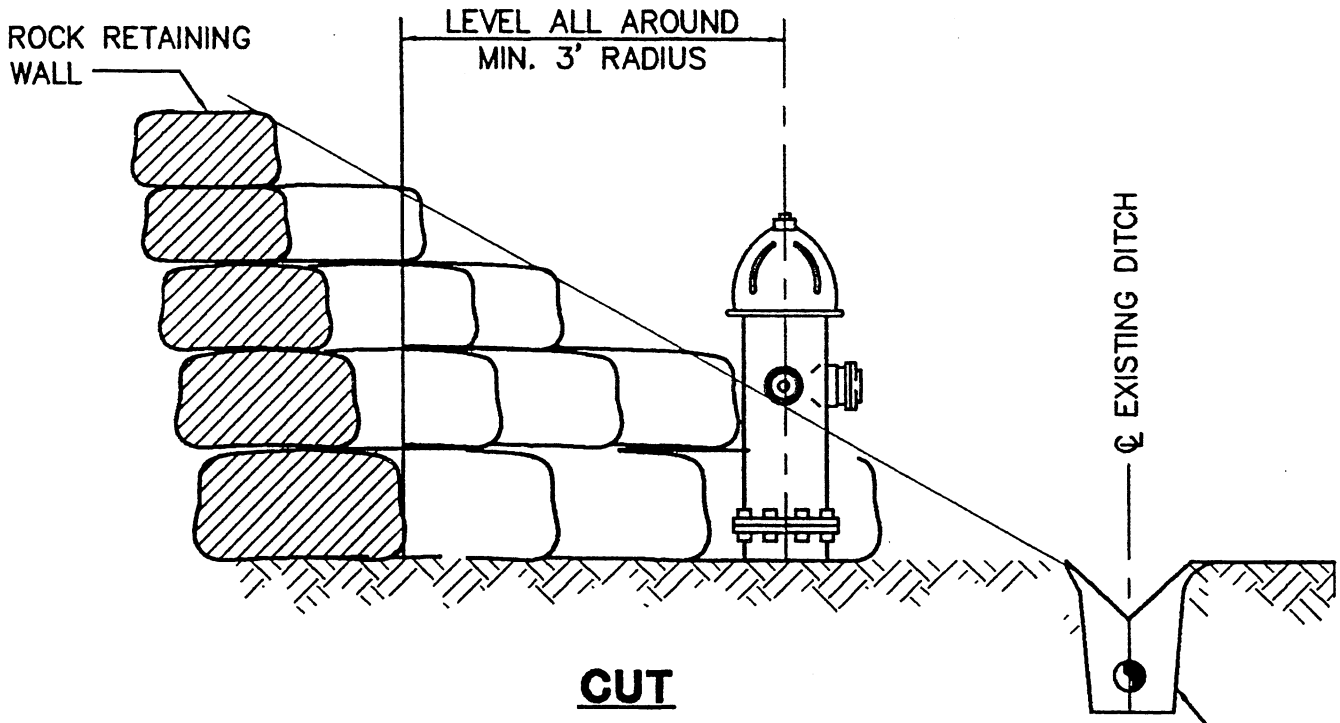

CUT

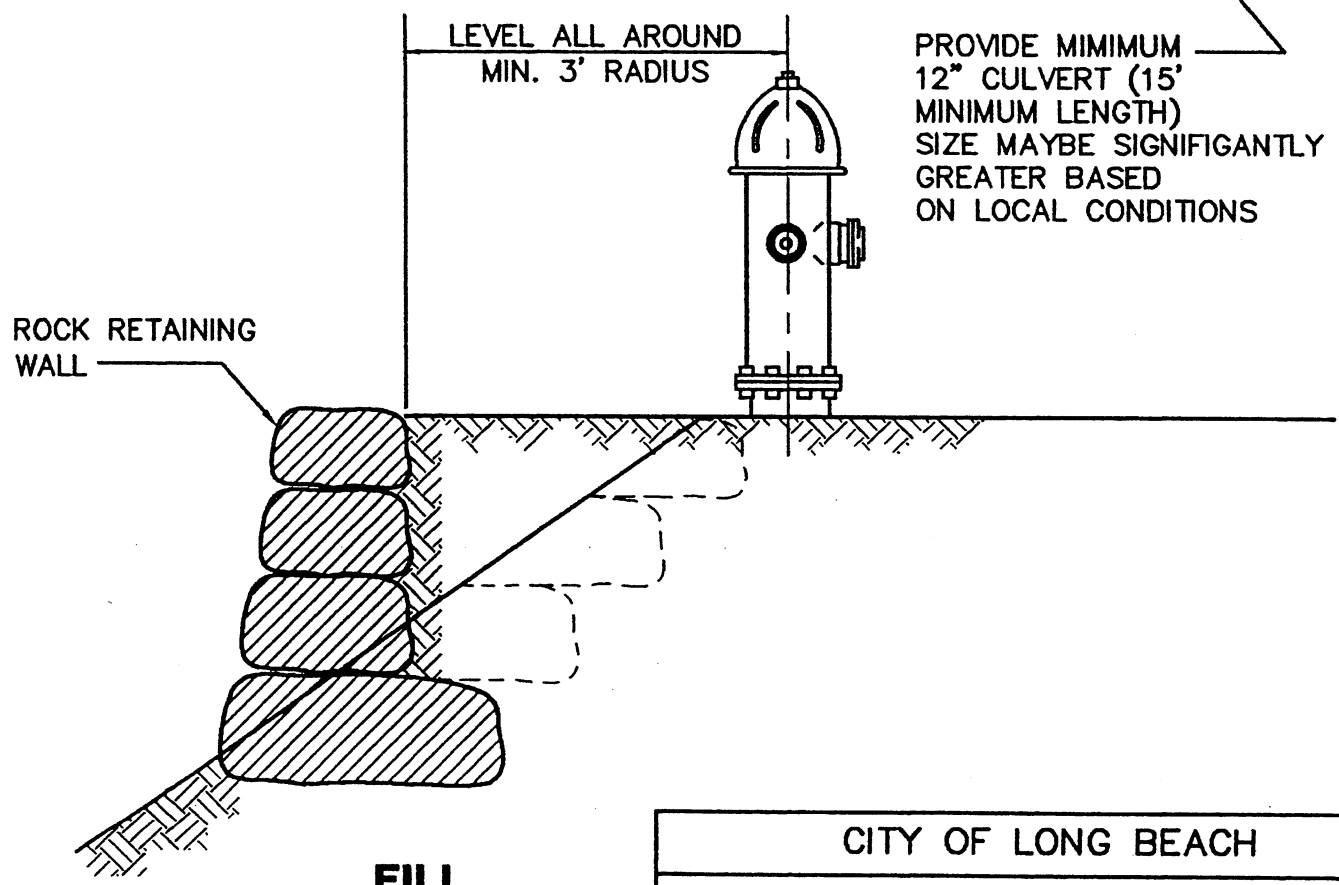

FILL

CITY OF LONG BEACH			
FIRE HYDRANT LOCATION IN CUT OR FILL			
APPROVED: BY CITY / DATE			DWG. NO. FHLCF
DATE: 8/96	DRWN: J.H.	CHKD: T.J.O.	SCALE: NONE

NOTES:

1. FIRE HYDRANT MUST MEET S.L.W.D. REQUIREMENTS OR REPLACED WITH NEW FIRE HYDRANTS.
2. OR 3' FROM BACK OF CURB
3. PROVIDE 8' OF 12" MINIMUM OR EQUAL INSIZE TO ANY ADJACENT DITCH PIPE TO COUNTY, STATE OR CITY STANDARDS IF APPLICABLE.
4. PROVIDE MIN. 3'-0" CLEARANCE AND LEVEL AREA AROUND HYDRANT
5. PAINT FIRE HYDRANT WITH TWO COATS PRESERVATIVE BRAND No.43-616 YELLOW
6. STENCIL FOOTAGE TO VALVE ON FIRE HYDRANT FOOTAGE UNDER PORT
7. REMOVE ALL CHAINS FOR FIRE HYDRANT CAPS
8. PROVIDE A STORZ 5" ADAPTOR AND CAP ON 4-1/2" PUMPER PORT

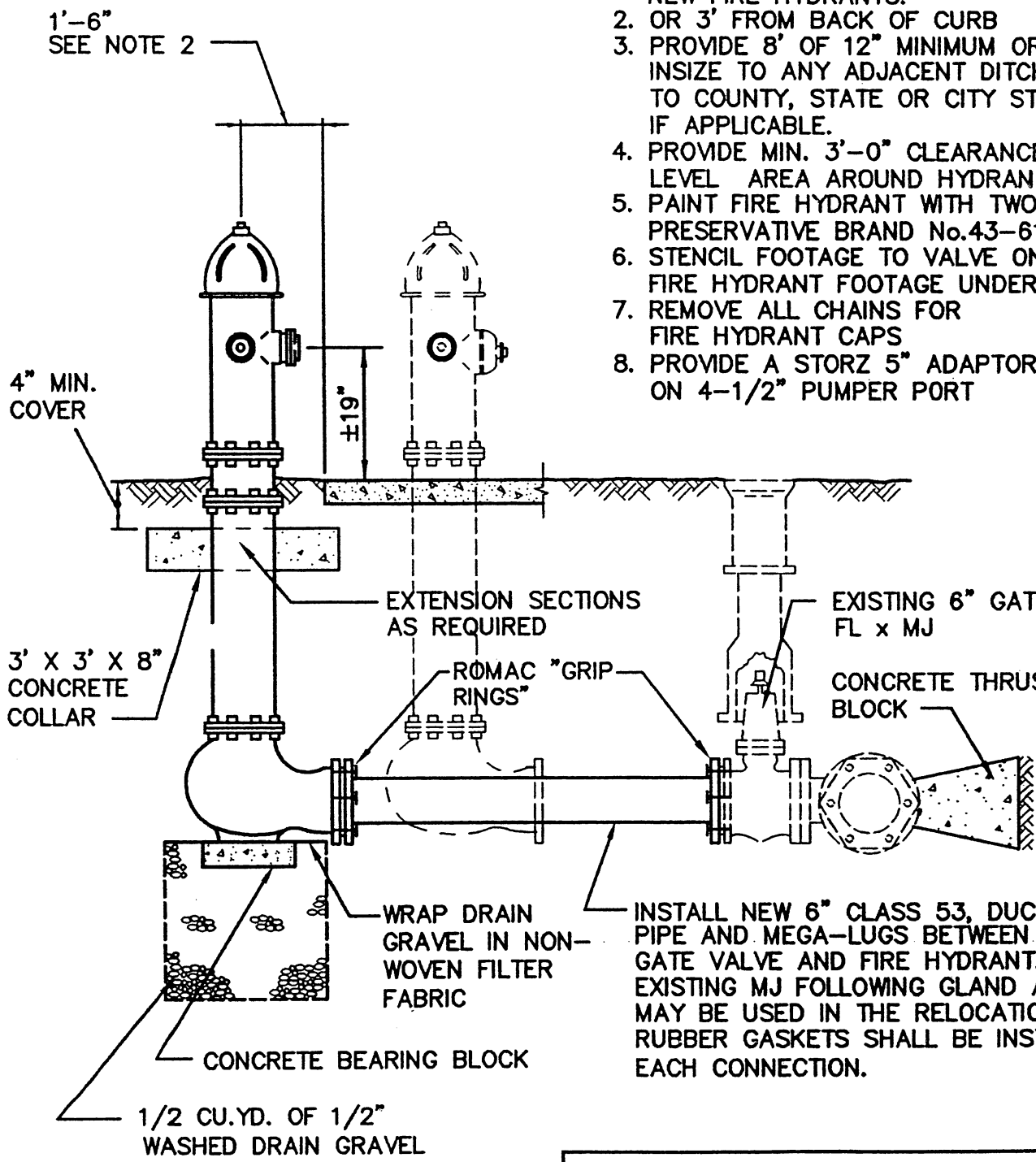

CITY OF LONG BEACH			
RELOCATE FIRE HYDRANT ASSEMBLY			
APPROVED: BY CITY / DATE			DWG. NO. RFHA
DATE: 8/96	DRWN: J.H.	CHKD: T.J.O.	SCALE: NONE

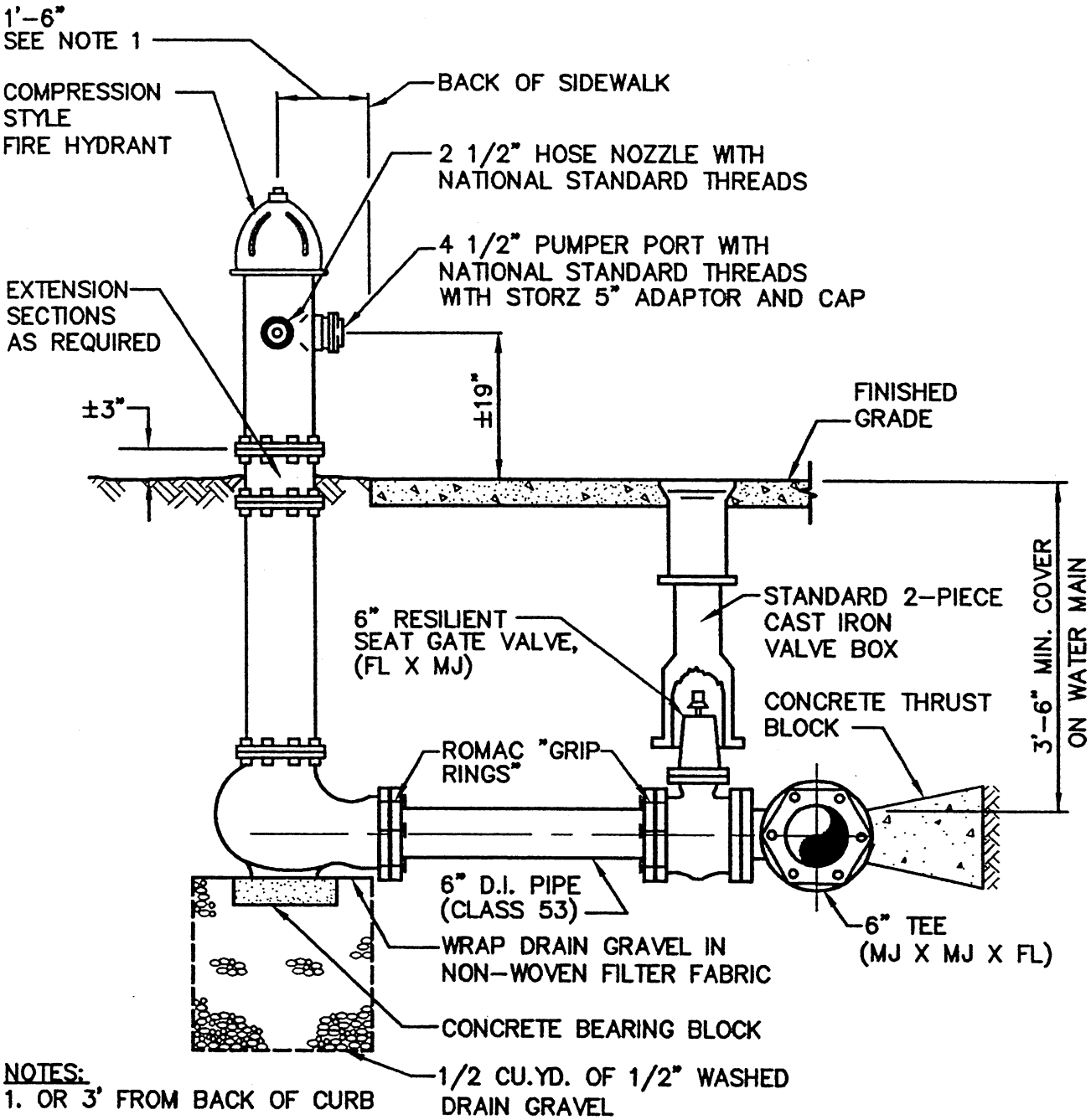

NOTES:

1. OR 3' FROM BACK OF CURB
2. PROVIDE 8' OF 12" MINIMUM OR EQUAL IN SIZE TO ANY ADJACENT DITCH PIPE TO COUNTY, STATE OR CITY STANDARDS IF APPLICABLE.
3. PROVIDE MIN. 3'-0" CLEARANCE AND LEVEL AREA AROUND HYDRANT
4. PAINT FIRE HYDRANT WITH TWO COATS PRESERVATIVE BRAND No.43-616 YELLOW
5. STENCIL FOOTAGE TO VALVE ON FIRE HYDRANT FOOTAGE UNDER PORT
6. REMOVE ALL CHAINS FOR FIRE HYDRANT CAPS

CITY OF LONG BEACH			
FIRE HYDRANT ASSEMBLY			
APPROVED: BY CITY / DATE			DWG. NO. FHA
DATE: 8/96	DRWN: J.H.	CHKD: T.J.O.	SCALE: NONE

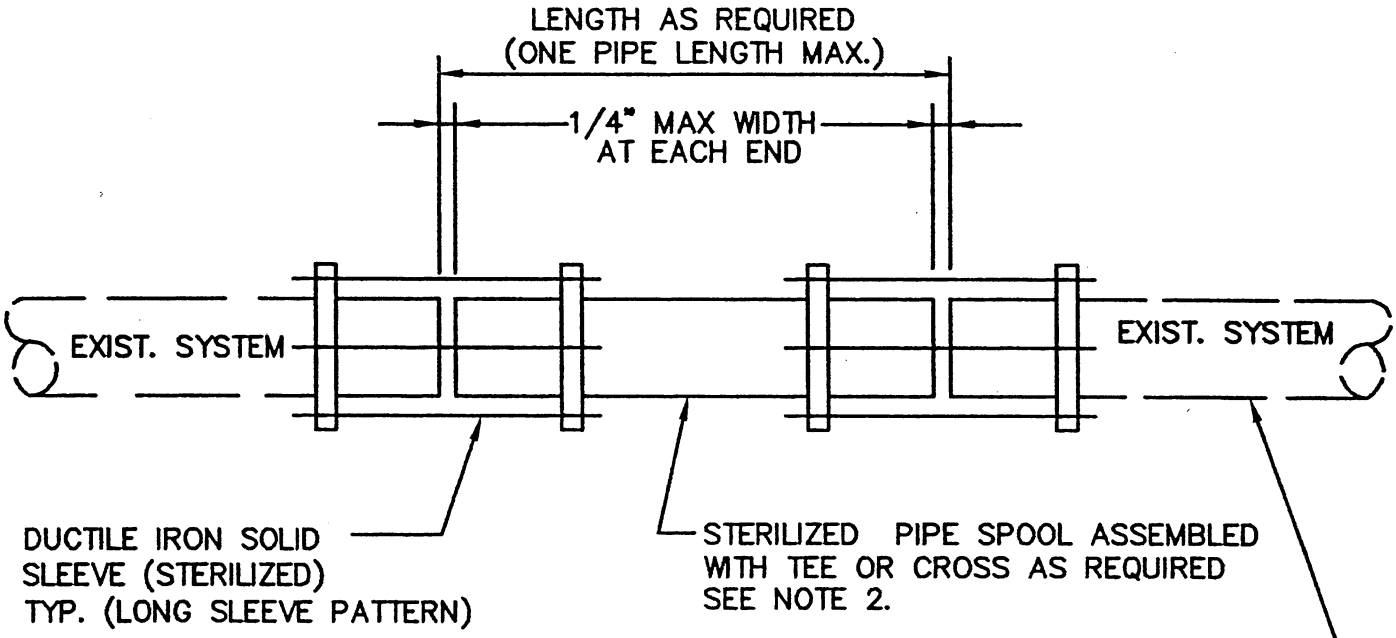

NOTE:

1. NO DEFLECTION SHALL BE ALLOWED AT EITHER COUPLING
2. ADDITIONAL "IN-LINE" VALVES(S) MAY BE REQUIRED AT THE DIRECTION OF THE CITY.

CITY OF LONG BEACH			
CUT IN CONNECTION			
APPROVED: BY CITY / DATE			DWG. NO. CIC
DATE: 8/96	DRWN: J.H.	CHKD: T.J.O.	SCALE: NONE

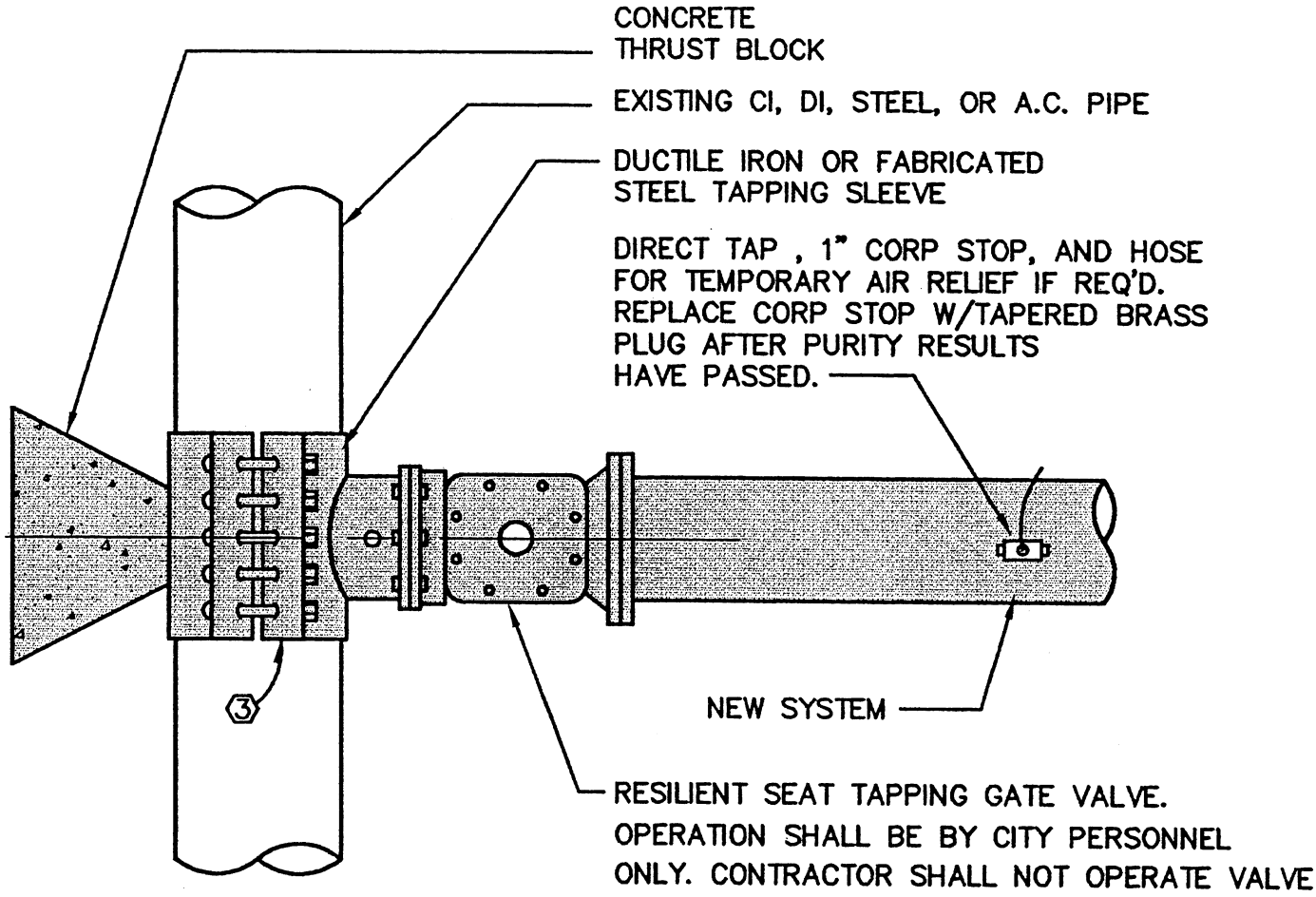

NOTE:

1. VALVE BOX TO HAVE A LOCKING LID UNTIL ACCEPTED BY THE CITY.
2. O.D. STEEL PIPE SHALL USE S.S. SLEEVE (FUNSION COATED).
3. STAINLESS STEEL SLEEVE IS SHOWN FOR ILLUSTRATIVE PURPOSES ONLY. SEE SECTION 7-04 B3 "TAPPING SLEEVES AND TAPPING VALVES".

CITY OF LONG BEACH			
WET TAP CONNECTION			
APPROVED: BY CITY / DATE			DWG. NO. WTC
DATE: 8/96	DRWN: J.H.	CHKD: T.J.O.	SCALE: NONE

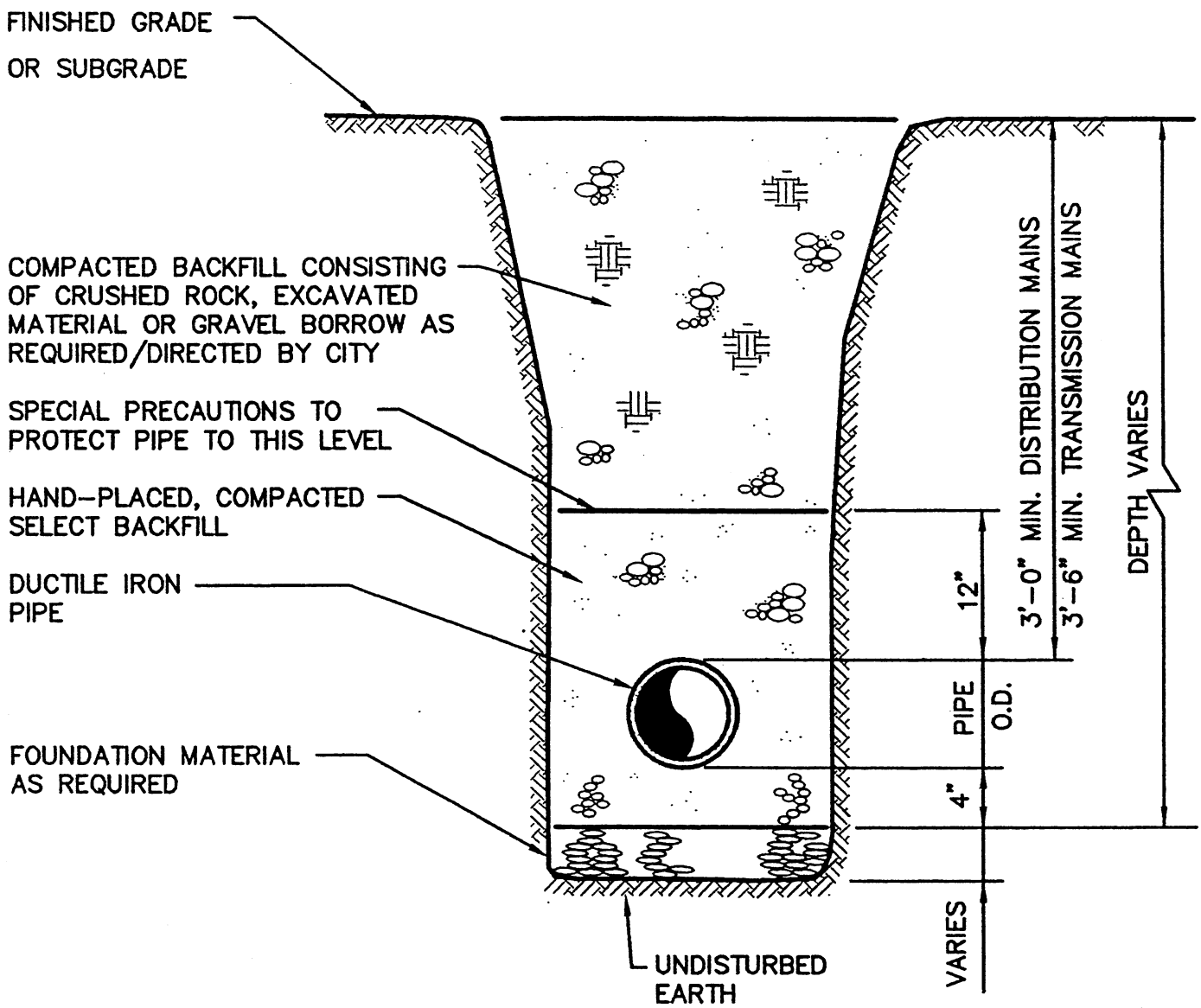

NOTE:

①BACKFILL MATERIAL AND COMPACTION SHALL BE IN CONFORMANCE WITH THE CITY STANDARDS AND\OR THE STATE OR COUNTY PERMIT REQUIREMENTS (AS MAY BE REQUIRED)

②PVC PIPE (CLASS SIZED BY CITY) SHALL BE INSTALLED IN LIEU OF DUCTILE IRON PIPE WHEN REQUIRED BY CITY.

CITY OF LONG BEACH			
WATER MAIN TRENCH SECTION			
APPROVED: BY CITY / DATE			DWG. NO. WMTS
DATE: 8/96	DRWN: J.H.	CHKD: T.J.O.	SCALE: NONE

TYPE "A" BLOCKING
FOR 11 1/4°–22 1/2° VERTICAL BENDS

PIPE SIZE NOMINAL DIAMETER– INCHES	TEST PRESSURE PSI	VB VERTICAL BEND DEGREES	No. OF CU. FT. OF CONC. BLOCKING	S SIDE OF CUBE LIN. FT.	D DIAM. OF SHACKLE RODS (2) INCHES	L DEPTH OF RODS IN CONCRETE LIN. FT.
4"	300	11 1/4	8	2	5/8"	1.5
		22 1/2	11	2.2		2.0
6"	300	11 1/4	11	2.2	5/8"	2.0
		22 1/2	25	2.9		
8"	300	11 1/4	16	2.5	5/8"	2.0
		22 1/2	47	3.6		
12"	250	11 1/4	32	3.2	5/8"	2.0
		22 1/2	88	4.5	7/8"	3.0
16"	225	11 1/4	70	4.1	7/8"	3.0
		22 1/2	184	5.7	1 1/8"	4.0
20"	200	11 1/4	91	4.5	7/8"	3.0
		22 1/2	225	6.1	1 1/4"	4.0
24"	200	11 1/4	128	5.0	1"	3.5
		22 1/2	320	6.8	1 3/8"	4.5

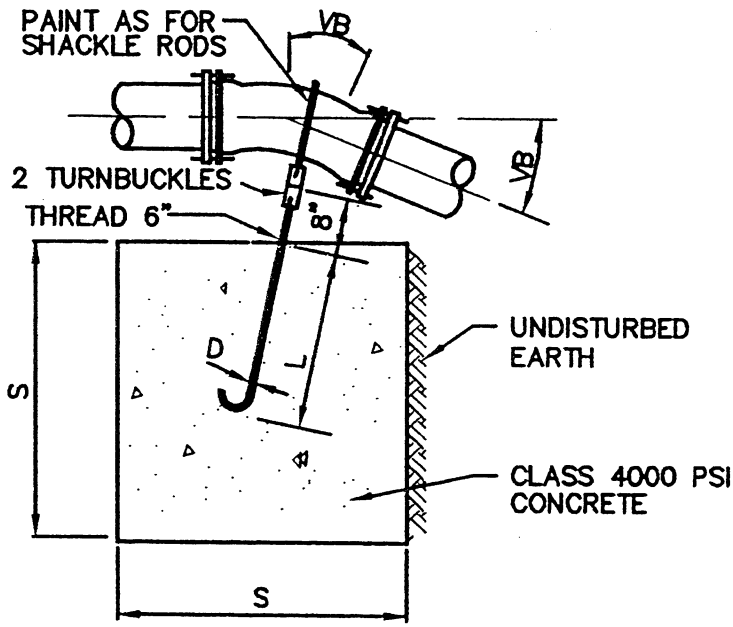

TYPE "A" BLOCKING

TYPE "B" BLOCKING
FOR – 45° VERTICAL BENDS

		VB		S	D	L
4"	300	45	30	3.1	5/8"	2.0
6"			68	4.1		
8"			123	5.0		
12"	250		232	6.1	3/4"	2.5
16"	225		478	7.8	1 1/8"	4.0
20"	200		560	8.2	1 1/4"	
24"			820	9.4	1 3/8"	4.5

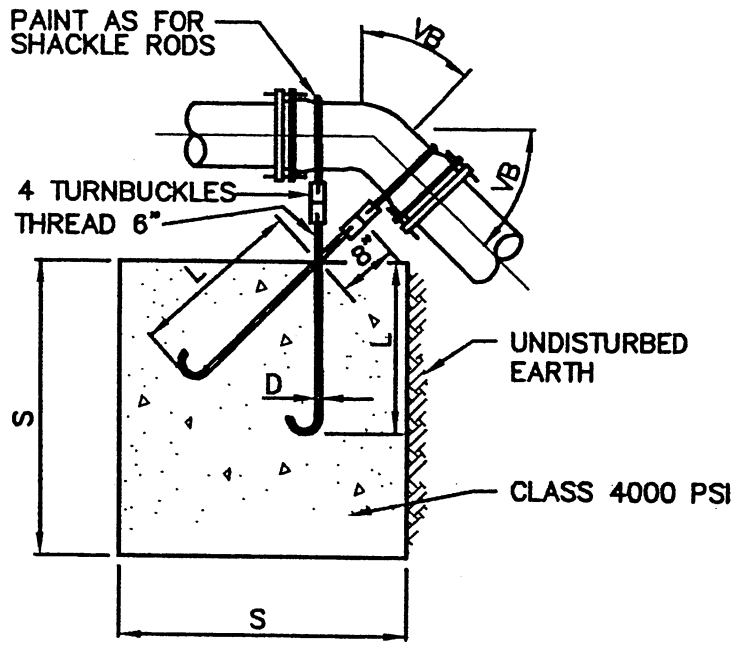

TYPE "B" BLOCKING

NOTE:

THIS TABLE REPRESENTS THE "MINIMUM" CONSTRUCTION STANDARDS. THE DEVELOPER'S ENGINEER SHALL BE RESPONSIBLE FOR THE DESIGN AND SIZING OF ALL BLOCKING BASED ON SOIL CONDITIONS, TEST PRESSURES, AND OTHER RELEVANT CONSIDERATIONS.

CITY OF LONG BEACH			
ANCHOR BLOCK DETAIL			
APPROVED: BY CITY / DATE			DWG. NO. VAB
DATE: 8/96	DRWN: J.H.	CHKD: T.J.O.	SCALE: NONE

MINIMUM BEARING AREA TABLE					
FITTING D	TEE	90°	45°	22 1/2°	11 1/4°
6"	4 SQ.FT.	6 SQ.FT.	3 SQ.FT.	2 SQ.FT.	2 SQ.FT.
8"	7 SQ.FT.	10 SQ.FT.	6 SQ.FT.	3 SQ.FT.	2 SQ.FT.
10"	10 SQ.FT.	15 SQ.FT.	9 SQ.FT.	5 SQ.FT.	3 SQ.FT.
12"	14 SQ.FT.	22 SQ.FT.	12 SQ.FT.	6 SQ.FT.	4 SQ.FT.
16"	25 SQ.FT.	38 SQ.FT.	21 SQ.FT.	11 SQ.FT.	7 SQ.FT.
18"	32 SQ.FT.	48 SQ.FT.	27 SQ.FT.	14 SQ.FT.	8 SQ.FT.

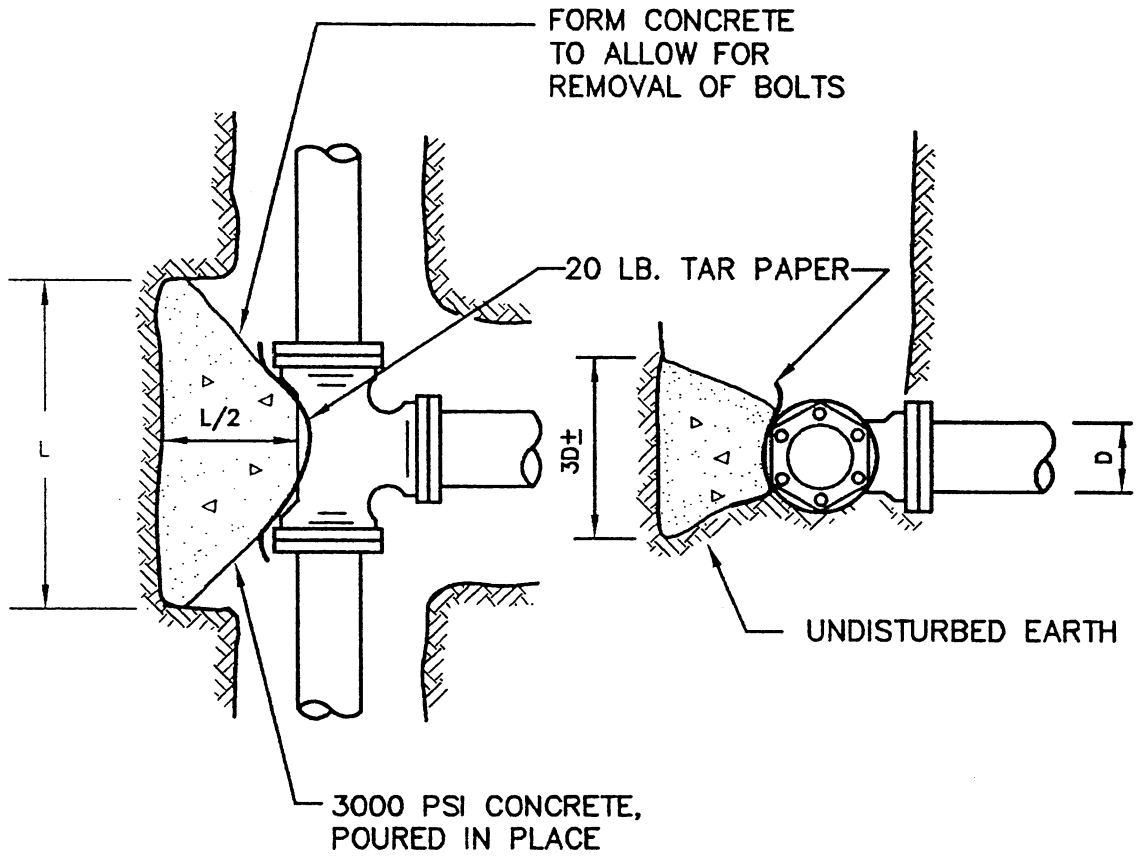

PLAN **ELEVATION**

NOTE:
BEARING AREA TABLE BASED ON 250 PSI PRESSURE AND 2000 PSF SOIL BEARING. IF PRESSURE IS GREATER OR SOIL BEARING IS LESS, THE THRUST BLOCK SIZE SHALL BE INCREASED. DESIGN FOR THRUST BLOCK TO BE PROVIDED BY DEVELOPER.

THIS TABLE REPRESENTS THE "MINIMUM" CONSTRUCTION STANDARDS. THE DEVELOPER'S ENGINEER SHALL BE RESPONSIBLE FOR THE DESIGN AND SIZING OF ALL BLOCKING BASED ON SOIL CONDITIONS, TEST PRESSURES, AND OTHER RELEVANT CONSIDERATIONS.

CITY OF LONG BEACH			
THRUST BLOCKS (FOR WATER MAINS)			
APPROVED: BY CITY / DATE			DWG. NO. TB
DATE: 8/96	DRWN: J.H.	CHKD: T.J.O.	SCALE: NONE

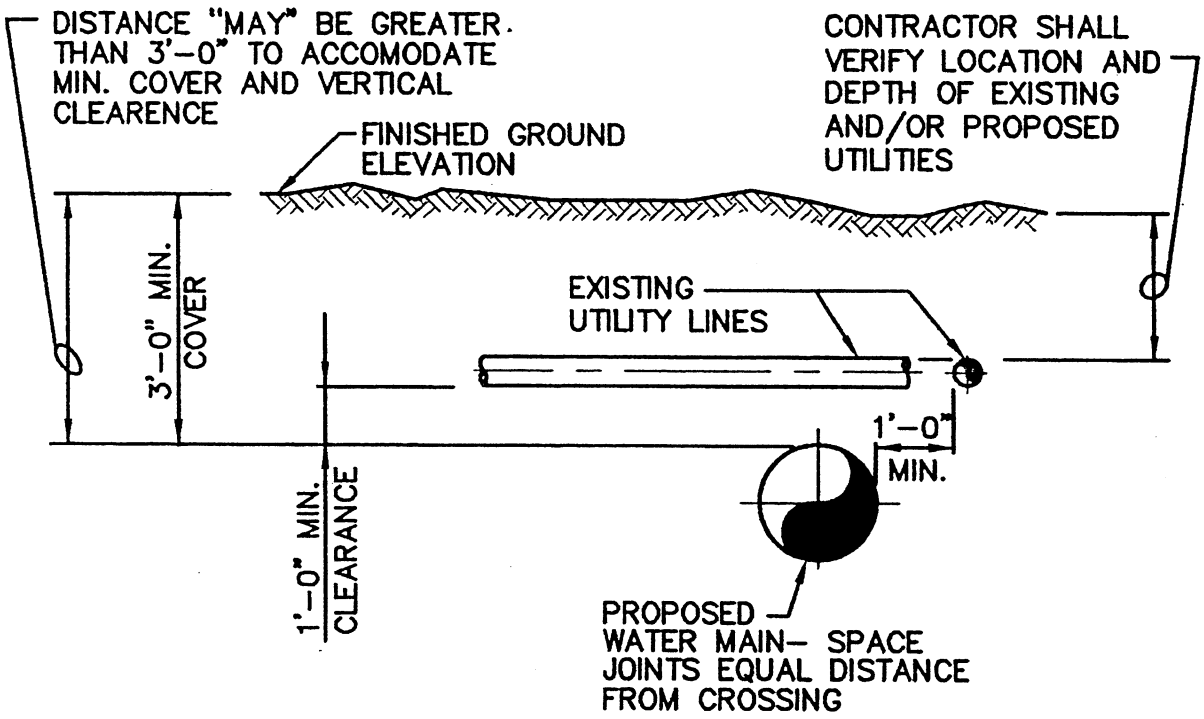

CITY OF LONG BEACH			
TYPICAL UTILITY CROSSING			
APPROVED: BY CITY / DATE			DWG. NO. TUC
DATE: 8/96	DRWN: J.H.	CHKD: T.J.O.	SCALE: NONE

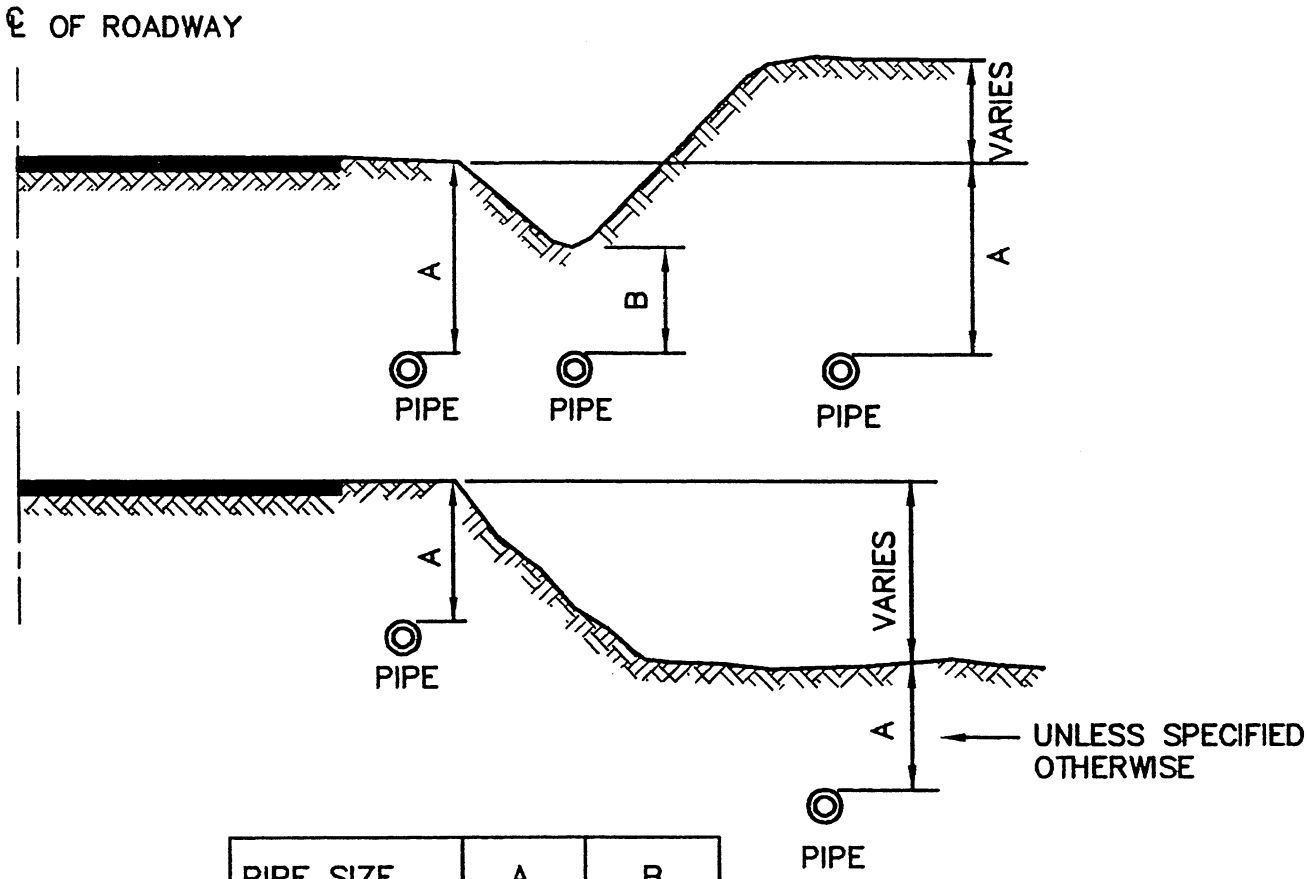

PIPE SIZE	A	B
6"–10"	36"	24"
12"–18"	36"	30"
20" & OVER	42"	36"

CITY OF LONG BEACH WATER STANDARD DETAILS			
WATER MAIN DEPTH REQUIREMENTS			
APPROVED: BY CITY DATE			DWG. NO. WMDR–1
DATE: 8/96	DRWN: J.H.	CHKD: T.J.O.	SCALE: NONE

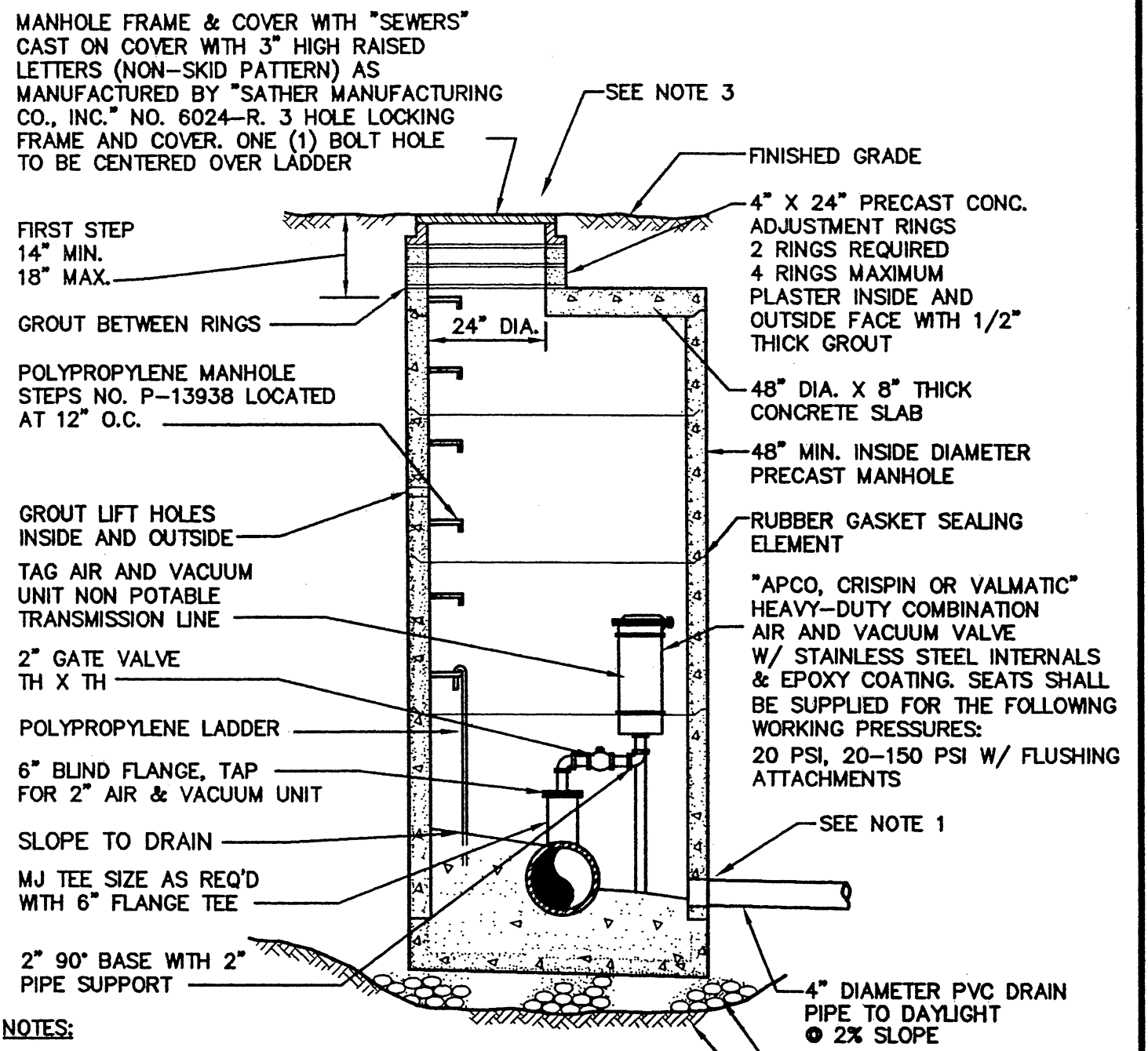

NOTES:

1. PIPE CONNECTIONS TO MANHOLES SHALL BE AS FOLLOWS:
   PVC PIPE: CAST OR GROUT A MANHOLE COUPLING INTO WALL.
   D.I. PIPE: BELL AND SPIGOT JOINT OR FLEXIBLE COUPLING EITHER SHALL BE 12" MAXIMUM DISTANCE FROM MANHOLE WALL.
   PVC AND D.I. PIPE, OPTIONAL: CORE THE MANHOLE AND CONNECT SEWER PIPE WITH A WATER TIGHT FLEXIBLE RUBBER BOOT IN MANHOLE WALL, KOR-N-SEAL BOOT OR EQUAL.
2. DROP OF GRADE THRU MANHOLE SHALL BE 0.10', UNLESS OTHERWISE APPROVED.
3. INSTALL CONCRETE COLLAR

CITY OF LONG BEACH			
AIR & VACUUM RELEASE ASSEMBLY			
APPROVED: BY CITY / DATE			DWG. NO. AVRA
DATE: 8/96	DRWN: J.H.	CHKD: T.J.O.	SCALE: NONE

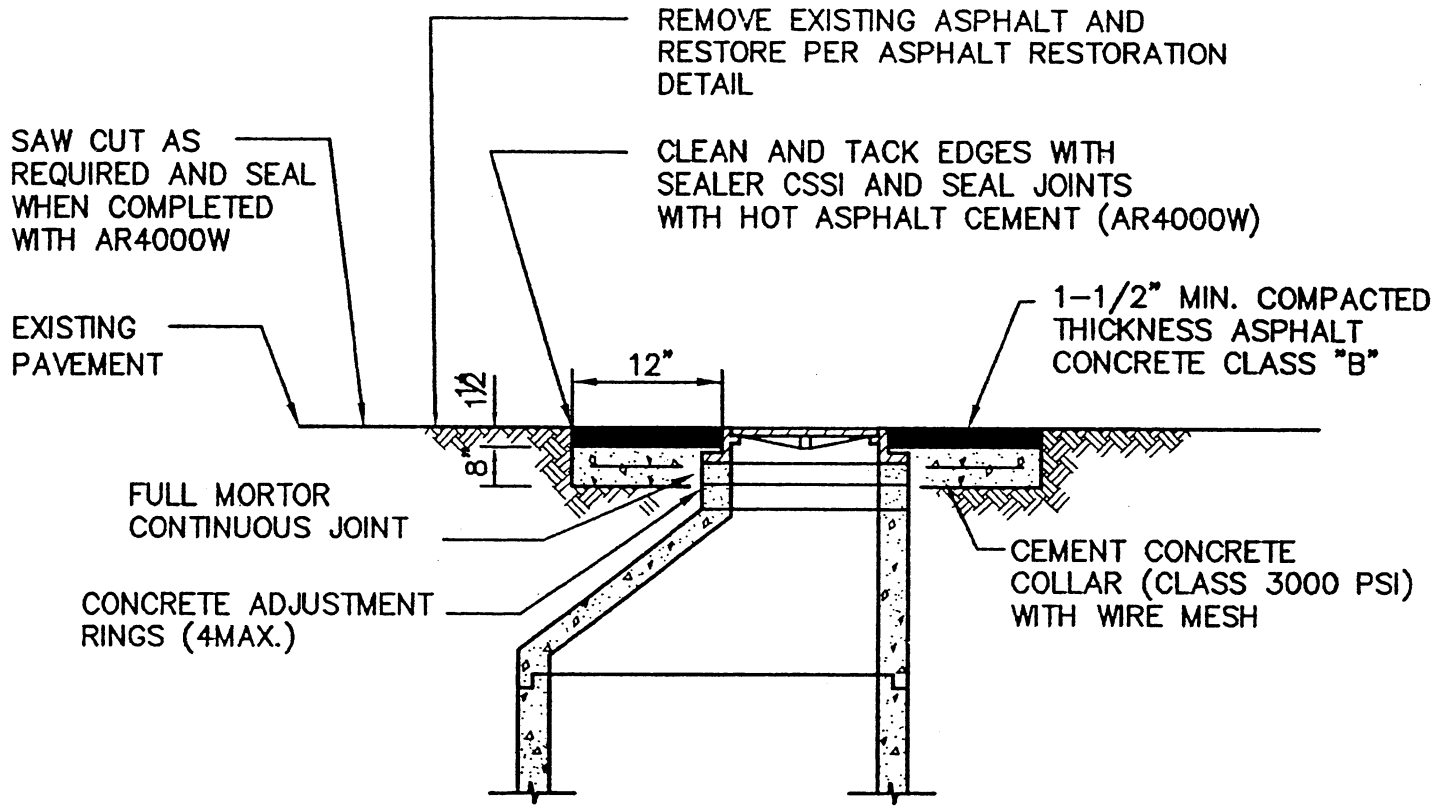

CITY OF LONG BEACH			
MANHOLE, OR CATCH BASIN (TYPE II) GRADE ADJUSTMENT DETAIL			
APPROVED: BY CITY / DATE			DWG. NO. STOM-2
DATE: 8/96	DRWN: J.H.	CHKD: T.J.O.	SCALE: NONE

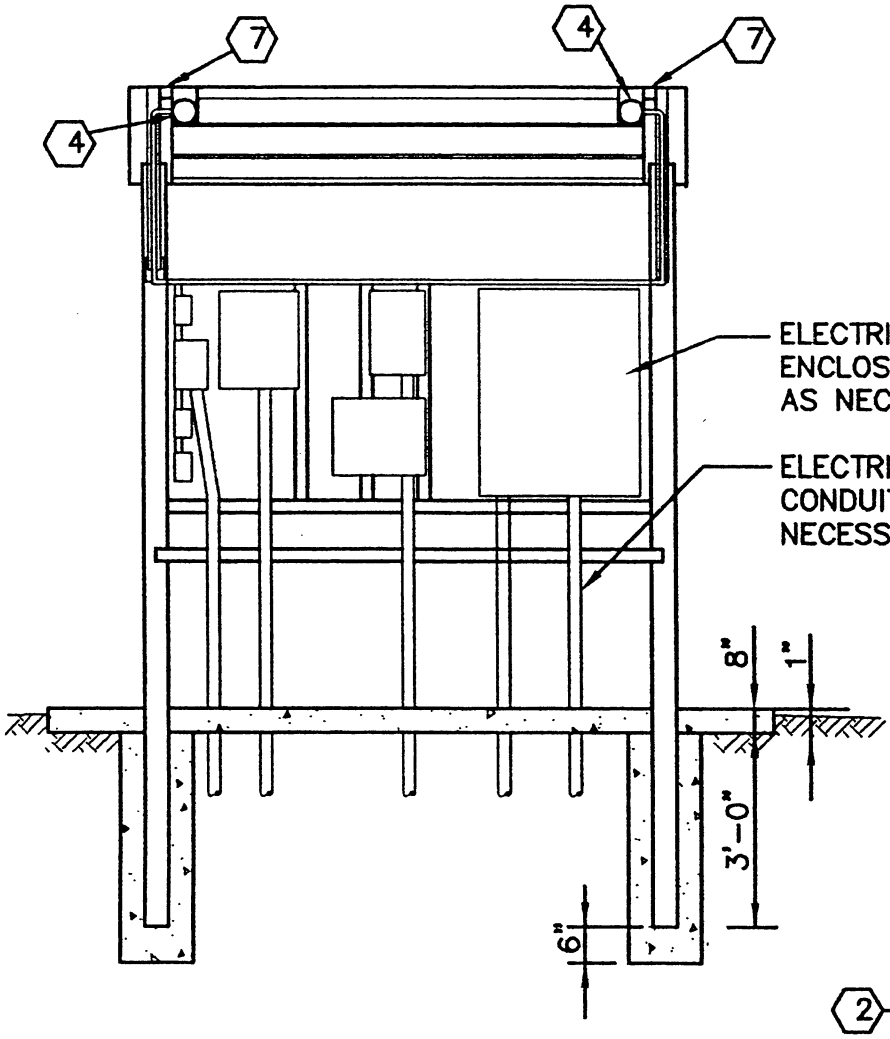

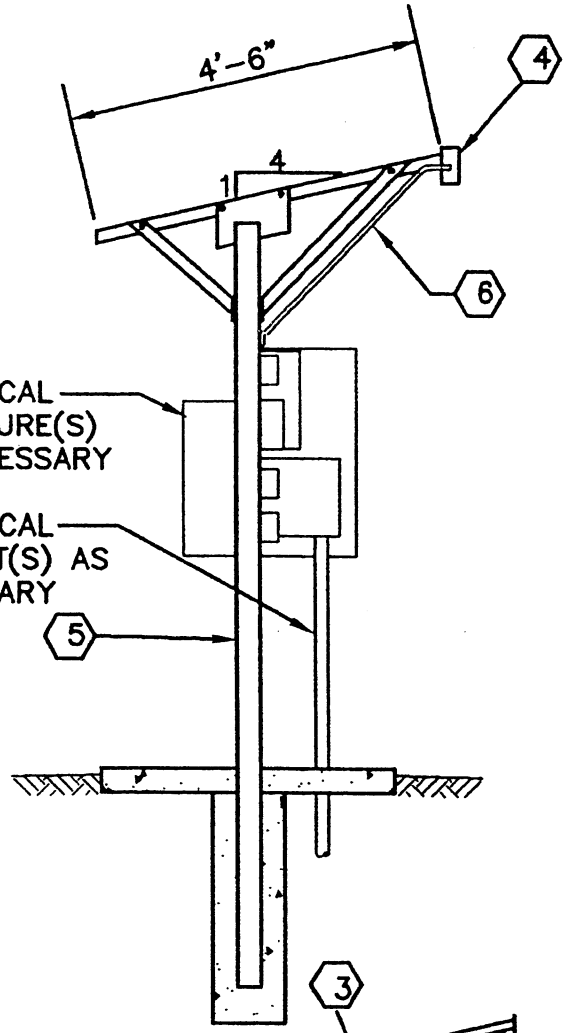

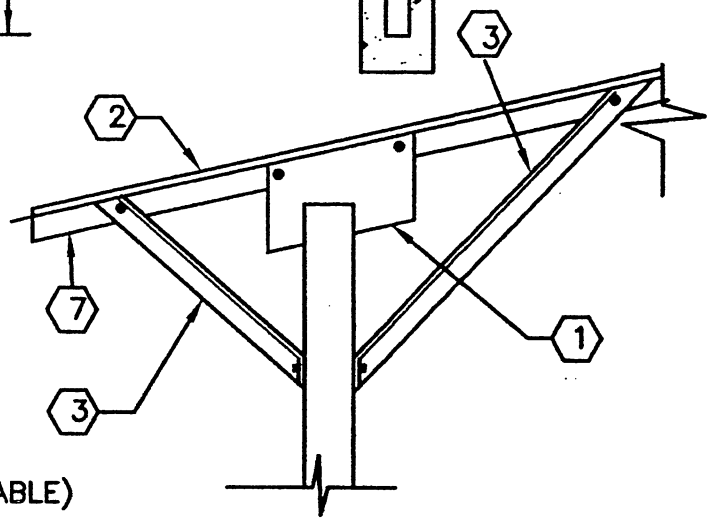

1. GALVANIZED STEEL PLATE 8x14x1/4"
2. 24 GAGE METAL ROOFING MATERIAL, PAINTED, OVERHANG ALL SIDES.
3. 2X2 GALV. STEEL ANGLE
4. LIGHT FIXTURE, 2 SETS, WEATHER PROOF CAST ALUMINUM BOX AND COVER 2 150 WATT FLOOD LIGHTS EACH (ADJUSTABLE)
5. 6" I.D. ELECTRICAL GALV. CONDUIT (SCHEDULE 40) CLOSED TOP (WELDED)
6. ELECTRICAL CONDUIT, 3/4" GALV.
7. 2-1/2" SQUARE TUBE STEEL, 1/4" WALL WITH 4 ROOF SUPPORT STRINGERS.

CITY OF LONG BEACH			
ROOF STRUCTURE FOR ELECTRICAL ENCLOSURE			
APPROVED: BY CITY / DATE			DWG. NO. RSEE
DATE: 8/96	DRWN: J.H.	CHKD: T.J.O.	SCALE: NONE

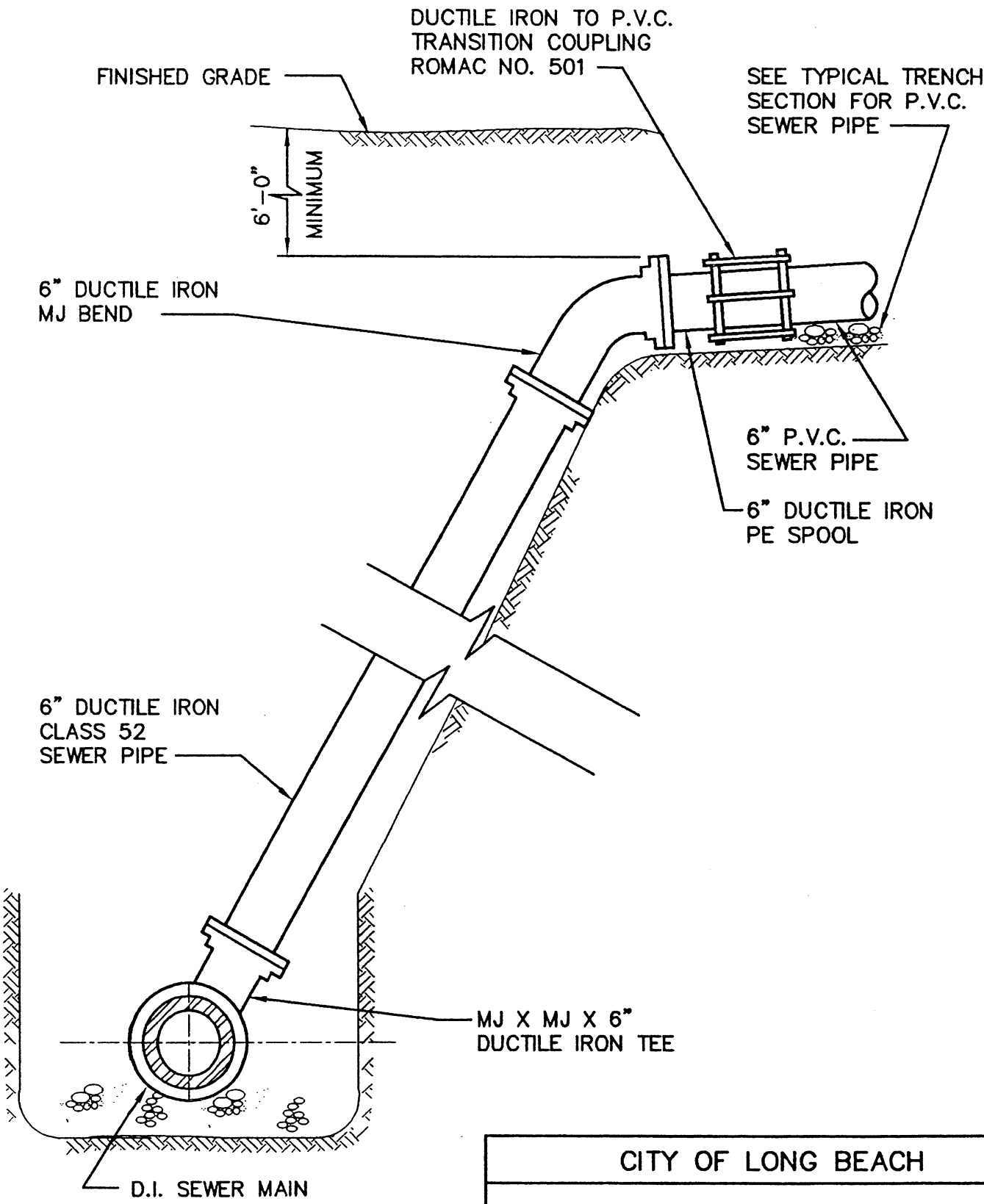

NOTE:
SEE TYPICAL TRENCH SECTION
FOR DUCTILE IRON SEWER PIPE

CITY OF LONG BEACH			
STANDING SIDE SEWER			
APPROVED: BY CITY / DATE			DWG. NO. SSS
DATE: 8/96	DRWN: J.H.	CHKD: T.J.O.	SCALE: NONE

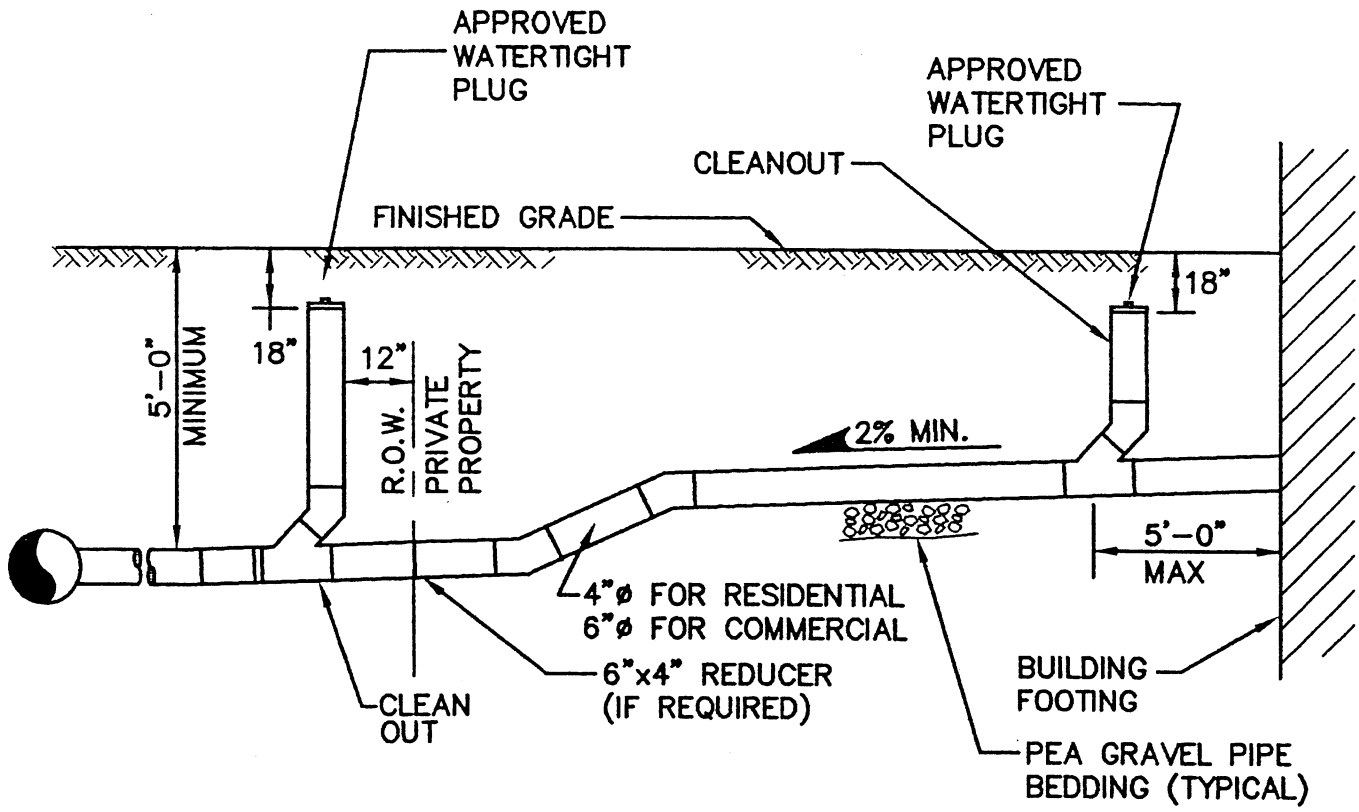

ELEVATION

NOTES:

1. ELBOWS SHALL NOT BE GREATER THAN 45°
2. A CLEAN OUT IS REQUIRED FOR PIPE RUNS GREATER THAN 100' AND FOR EACH 90° ACCUMULATED BEND/100' OF LENGTH
3. RIGHT-OF-WAY RESTORATION SHALL MATCH OR EXCEED ORIGINAL CONDITIONS.
4. TRENCH BACKFILL BENEATH PAVED SURFACE SHALL BE 5/8" MINUS CRUSHED SURFACING TOP COURSE, COMPACTED IN 12" LIFTS
5. ALL PLUMBING OUTLETS SHALL BE CONNECTED TO THE SEWER. NO DOWNSPOUTS OR STORM DRAINAGE SHALL BE CONNECTED TO THE SANITARY SYSTEM.
6. 18" MINIMUM COVER ON ALL PIPES (PRIVATE PROPERTY) AND SLOPE @ 2% MINIMUM.
7. 6' MIMIMUM PIPE COVER AT PROPERTY LINE
8. LAY PIPE IN STRAIGHT LINE BETWEEN BENDS. MAKE ALL CHANGES IN GRADE OR LINE WITH AN ELBOW OR WYE.
9. 6" SEWER PIPE MINIMUM SIZE IN RIGHT-OF-WAY. LAY AT 2% MINIMUM GRADE, 45% MAXIMUM GRADE.
10. 4" SEWER PIPE MINIMUM SIZE ON PRIVATE RESIDENTIAL PROPERTY. 6" SEWER PIPE MIN. SIZE ON COMMERCIAL PROPERTIES. 2% MINIMUM GRADE, 45° MAXIMUM.
11. CONSTRUCTION IN RIGHT-OF-WAY SHALL BE PERFORMED BY A REGISTERED LICENSED CONTRACTOR. ACQUIRE CITY PERMIT.
12. ALL CONSTRUCTION REQUIRES A PERMIT AND PAYMENT OF FEE. COMPLETE LEGAL DESCRIPTION OF PROPERTY AND DIMENSIONS.
13. AS-BUILT DRAWING SHOWING LOCATION OF SIDE SEWER IN RELATION TO THE HOUSE AND EXISTING UTILITIES IS REQUIRED AFTER INSTALLATION.

CITY OF LONG BEACH			
PRIVATE SIDE SEWER INSTALLATION			
APPROVED: BY CITY / DATE			DWG. NO. PSSI
DATE: 8/96	DRWN: J.H.	CHKD: T.J.O.	SCALE: NONE

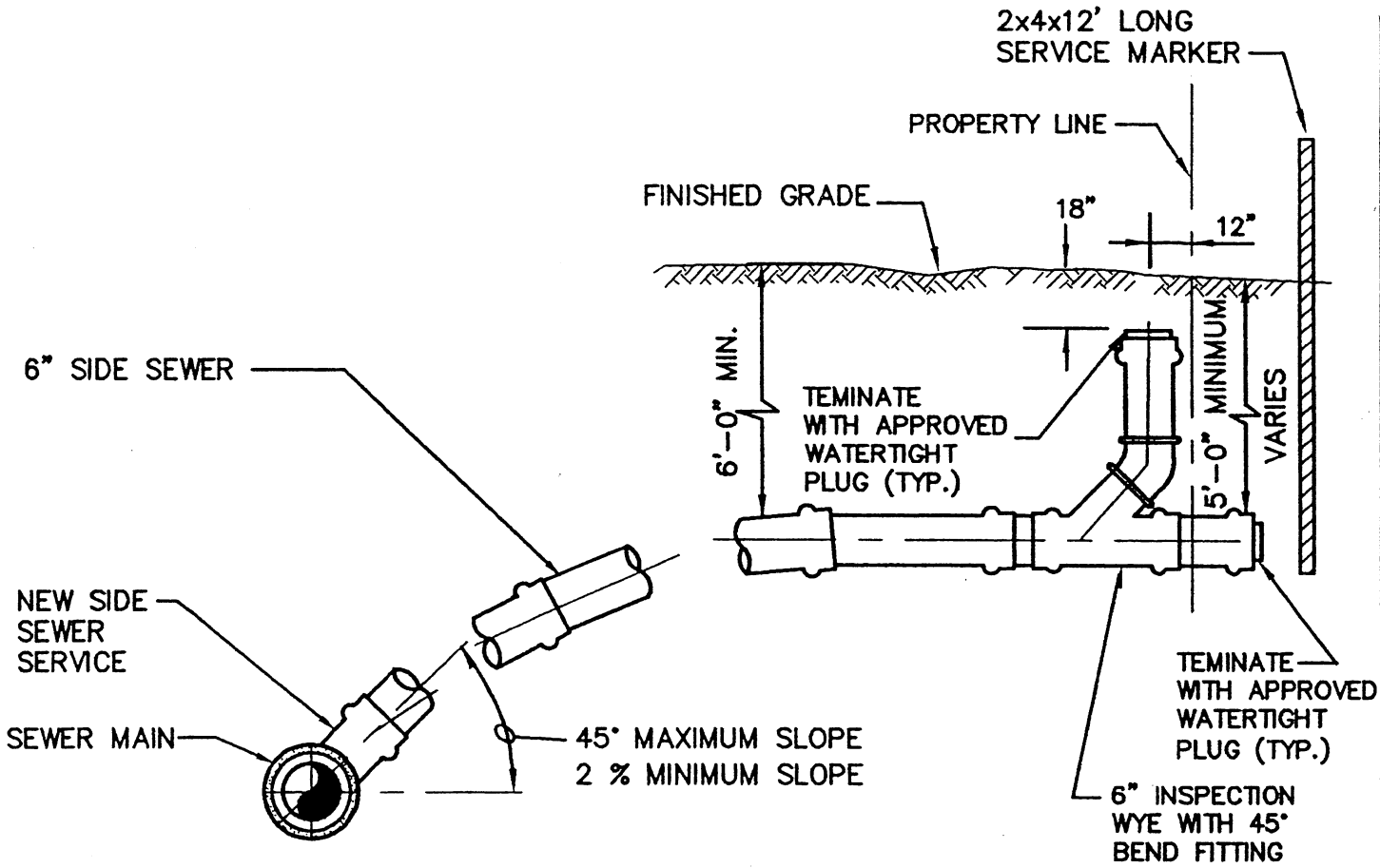

NOTE:

1. PAINT PORTION OF SERVICE MARKER THAT IS ABOVE FINISHED GRADE WITH WHITE PAINT. STENCIL WITH BLACK LETTERS "S/S" USING 3" HIGH LETTERS. LOCATE SERVICE MARKER AT END OF EACH SERVICE. STENCIL TOTAL LENGTH OF 2x4.
2. TAP EXISTING SEWER MAIN WITH APPROVED CITY SADDLE. INSTALL NEW SIDE SEWER TEE ON NEW MAIN LINES.
3. WHEN TAPPED SERVICE IS PERMITTED, CONTRACTOR SHALL PROVIDE SEWER MAIN COUPON TO CITY STAFF.
4. SEE "TYPICAL SIDE SEWER DETAIL" FOR CONSTRUCTION IN NEW DEVELOPMENTS.
5. PROVIDE PEA GRAVEL PIPE BEDDING SEE TRENCH SECTION DETAIL.

CITY OF LONG BEACH			
NEW SIDE SEWER SERVICE (WITHIN EXISTING STREET RIGHT-OF-WAY)			
APPROVED: BY CITY / DATE			DWG. NO. SSD
DATE: 8/96	DRWN: J.H.	CHKD: T.J.O.	SCALE: NONE

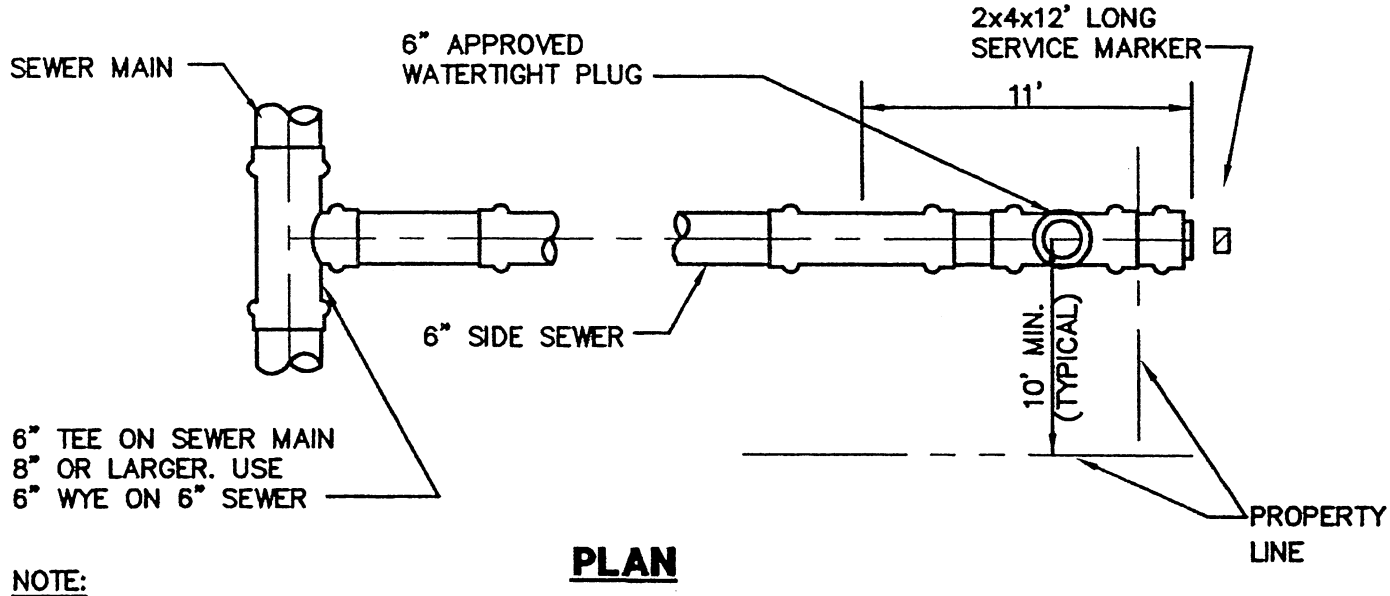

PLAN

NOTE:

PAINT PORTION OF SERVICE MARKER THAT IS ABOVE FINISHED GRADE WITH WHITE PAINT. STENCIL WITH BLACK LETTERS "S/S" USING 3" HIGH LETTERS. LOCATE SERVICE MARKER AT END OF EACH SERVICE. STENCIL TOTAL LENGTH OF 2x4.

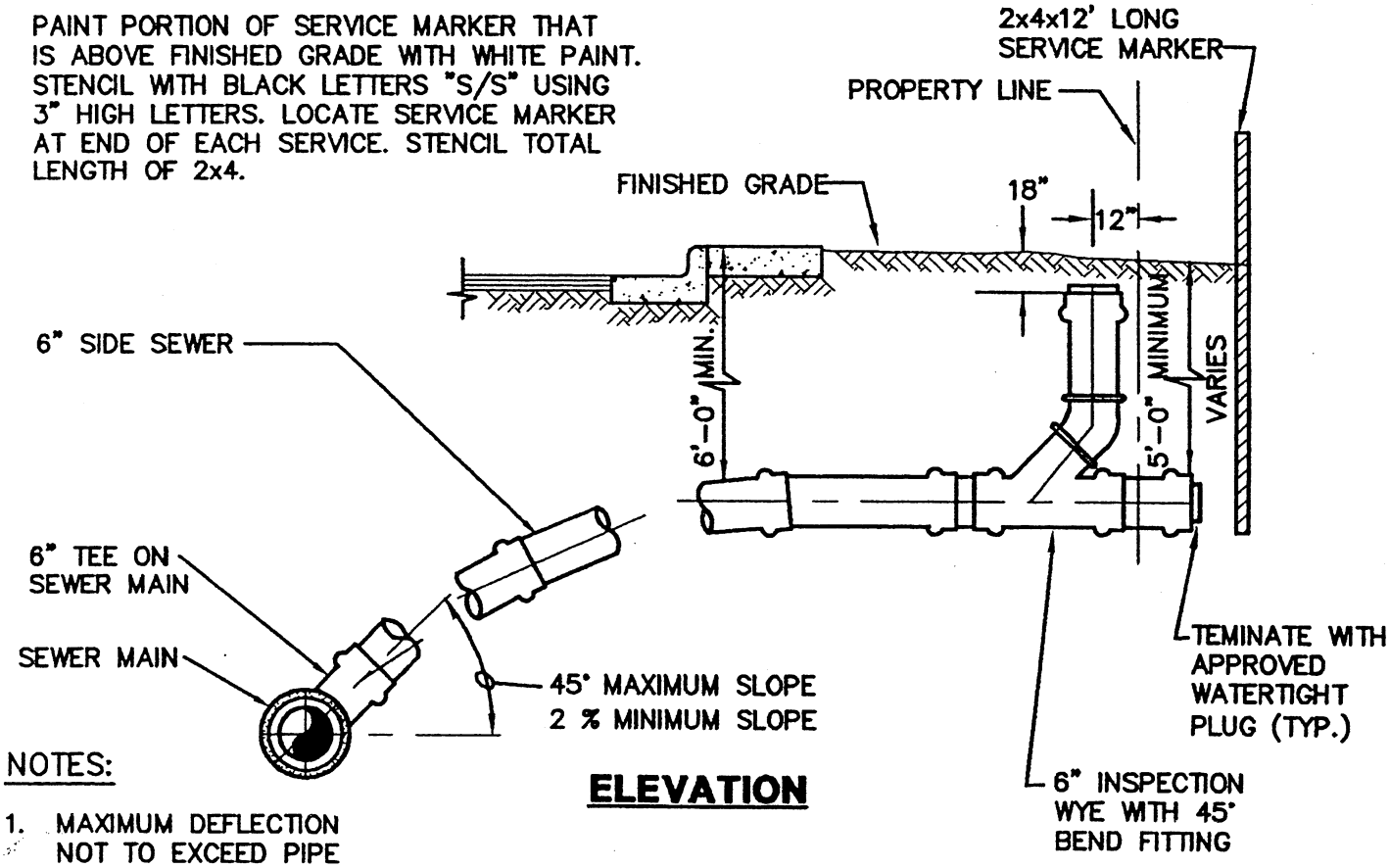

ELEVATION

NOTES:

1. MAXIMUM DEFLECTION NOT TO EXCEED PIPE MANUFACTURER RECOMMENDATIONS.
2. SIDE SEWER LATERAL SHALL BE THE SAME MATERIAL AS THE MAIN LINE SEWER AND BEDDED THE SAME
3. PIPE TO BE BEDDED IN PEA GRAVEL.

CITY OF LONG BEACH			
TYPICAL SIDE SEWER DETAIL (WITHIN NEW DEVELOPEMENT)			
APPROVED: BY CITY / DATE			DWG. NO. TSSD
DATE: 8/96	DRWN: J.H.	CHKD: T.J.O.	SCALE: NONE

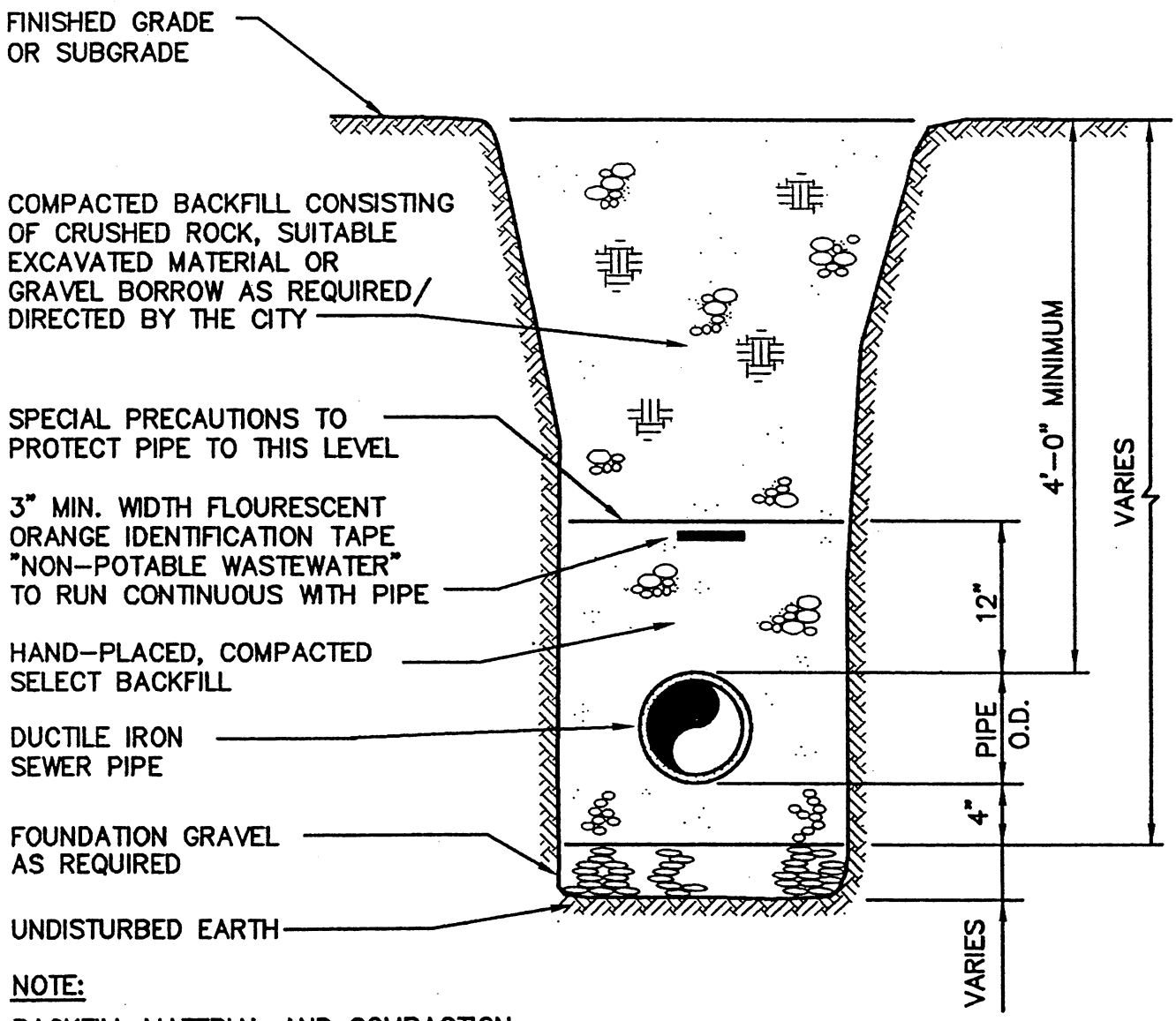

NOTE:

1. BACKFILL MATERIAL AND COMPACTION SHALL BE IN CONFORMANCE WITH THE CITY STANDARDS AND/OR THE STATE OR COUNTY PERMIT REQUIREMENTS, (AS MAY BE APPLICABLE)

2. FORCE MAIN MAY BE HDPE OR PVC OF THE SIZE AND CLASS APPROVED BY CITY IF CONDITIONS WARRANT SAME (AND AS REQUIRED AND DIRECTED BY CITY). WHEN HDPE OR PVC IS APPROVED, BEDDING SHALL EXTEND FROM 4" BELOW PIPE TO 4" ABOVE PIPE.

CITY OF LONG BEACH			
PRESSURE LINE AND FORCE MAIN TYPICAL TRENCH SECTION			
APPROVED: BY CITY / DATE			DWG. NO. PLFMTTS
DATE: 8/96	DRWN: J.H.	CHKD: T.J.O.	SCALE: NONE

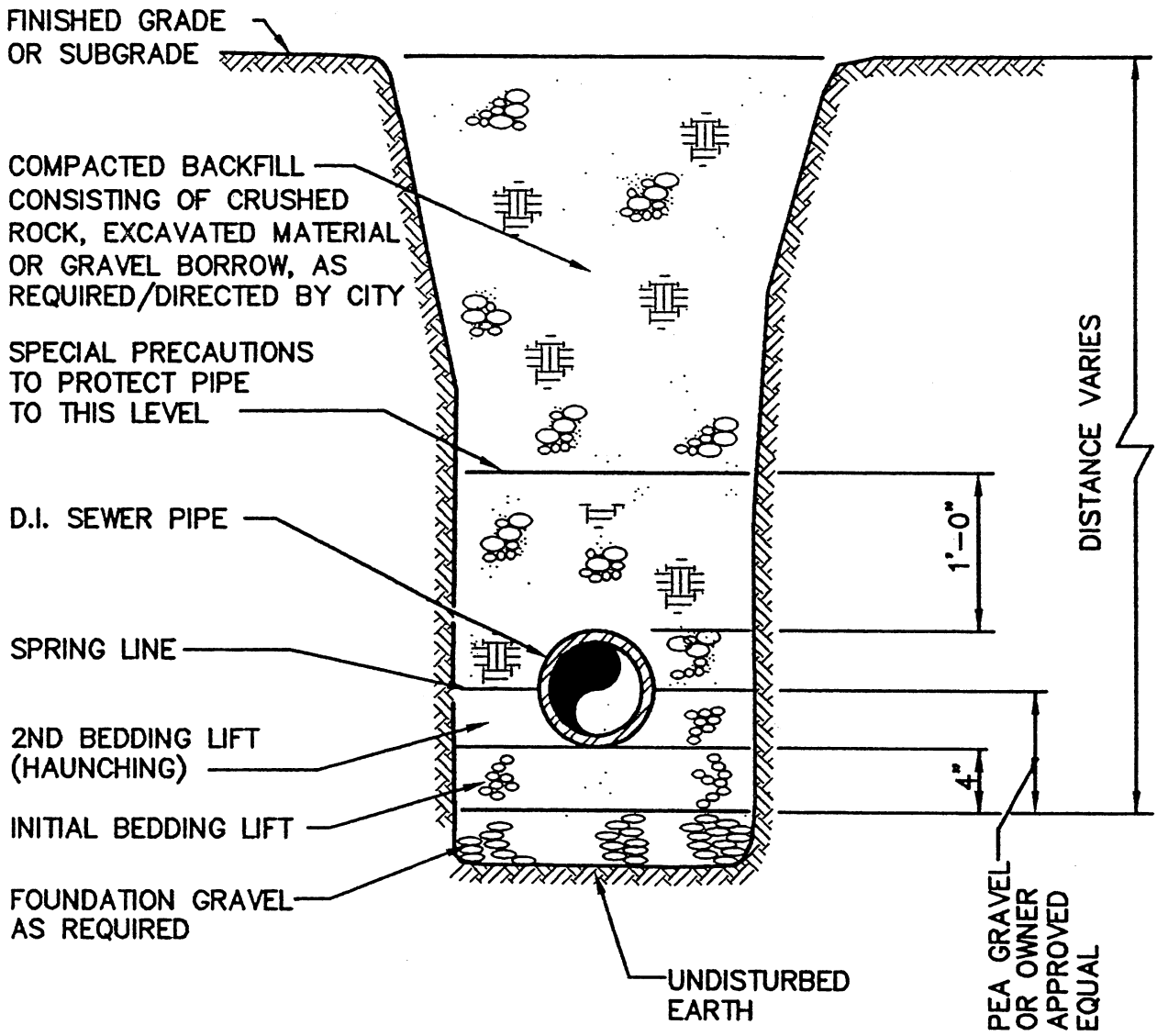

NOTE:

BACKFILL MATERIAL AND COMPACTION SHALL BE IN CONFORMANCE WITH CITY STANDARDS AND/OR THE STATE OR COUNTY PERMIT REQUIREMENTS, (AS BE APPLIABLE)

CITY OF LONG BEACH			
SANITARY SEWER TRENCH SECTION FOR D.I. PIPE			
APPROVED: BY CITY / DATE			DWG. NO. SSTSDIP
DATE: 8/96	DRWN: J.H.	CHKD: T.J.O.	SCALE: NONE

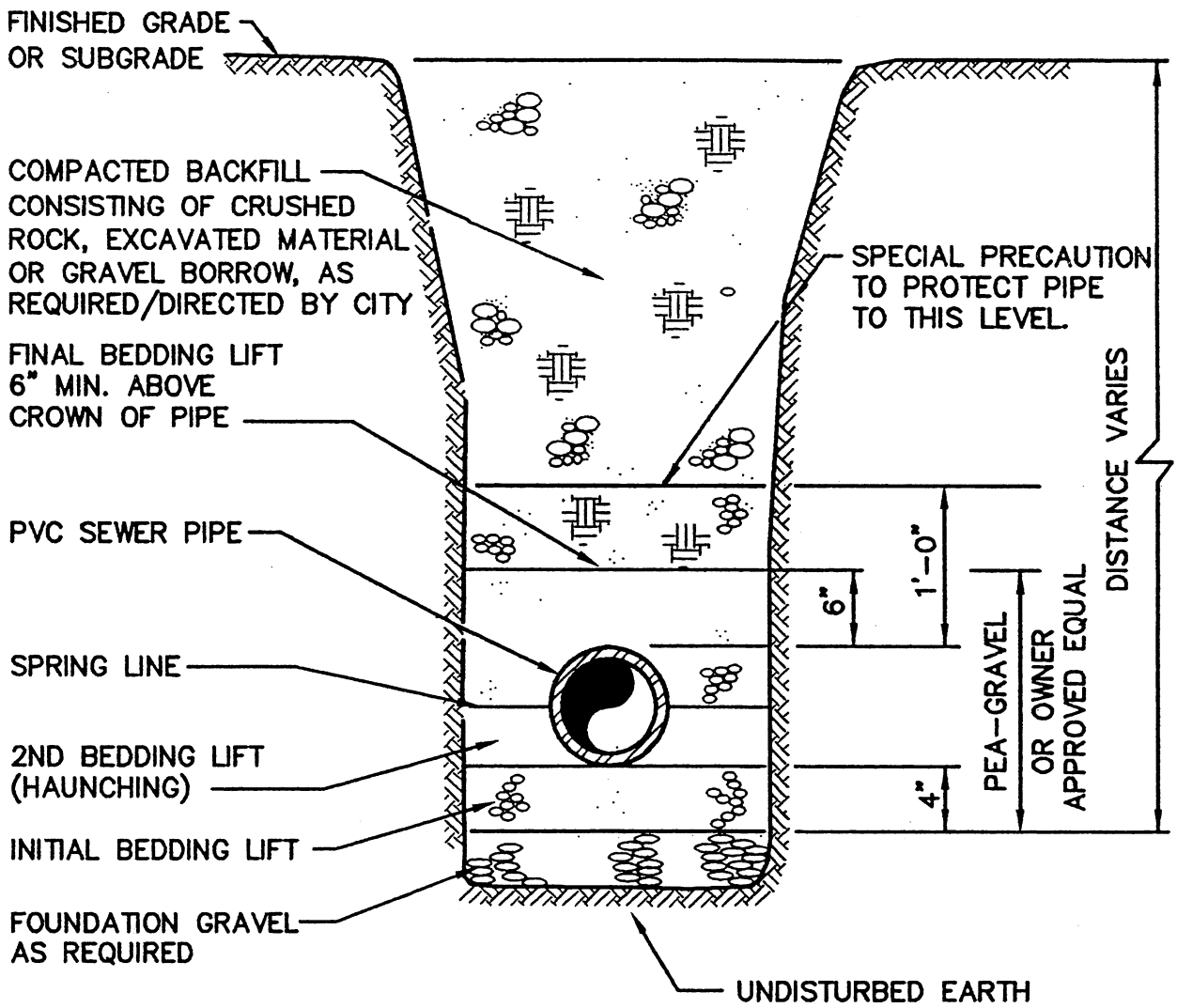

NOTE:

BACKFILL MATERIAL AND COMPACTION SHALL BE IN CONFORMANCE WITH CITY STANDARDS AND/OR THE STATE OR COUNTY PERMIT REQUIREMENTS (AS MAY BE APPLICABLE)

CITY OF LONG BEACH			
SANITARY SEWER TRENCH SECTION FOR P.V.C. PIPE			
APPROVED: BY CITY / DATE			DWG. NO. SSTSPVCP
DATE: 8/96	DRWN: J.H.	CHKD: T.J.O.	SCALE: NONE

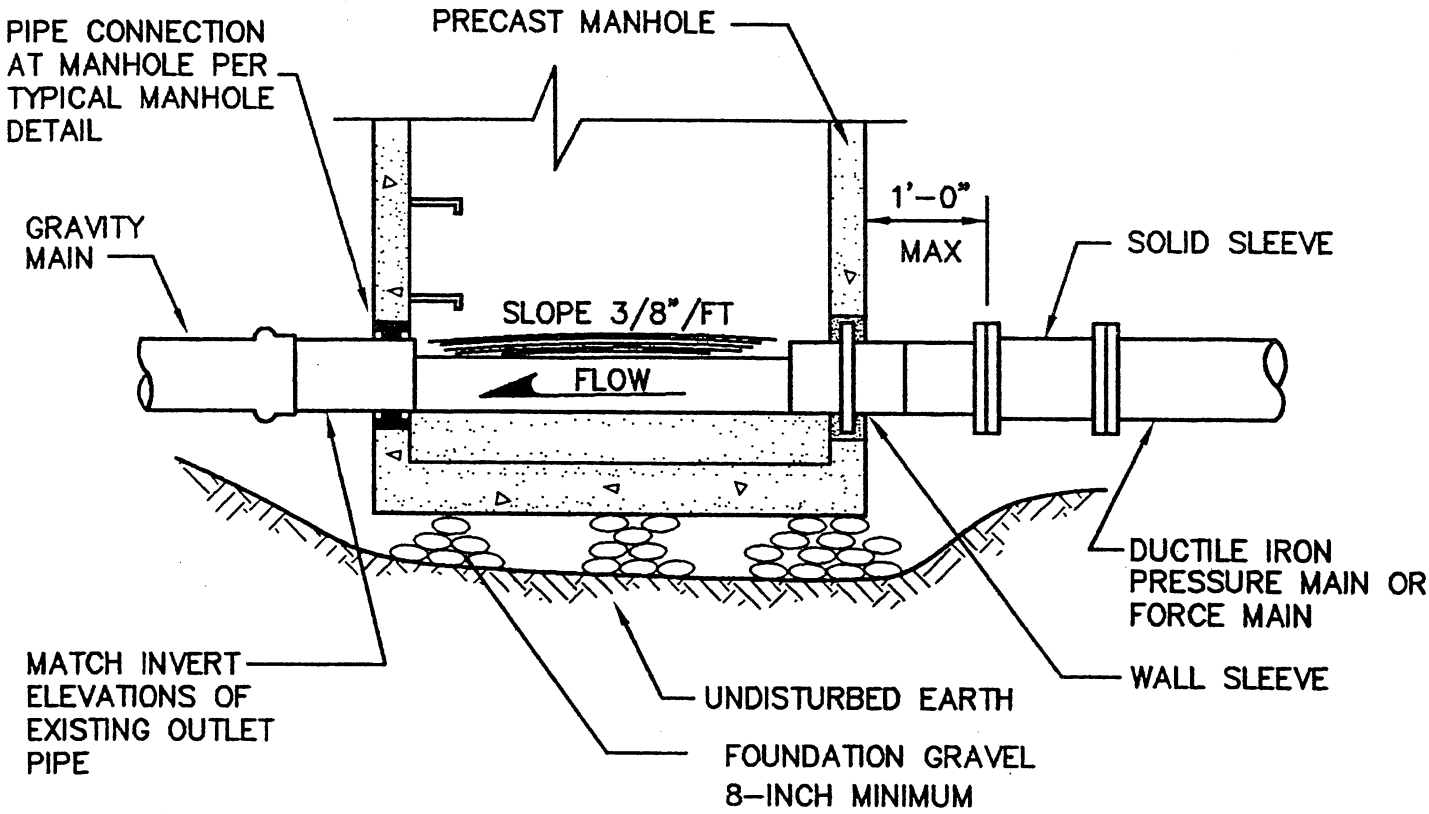

NOTES:

1. PIPE CONNECTIONS TO MANHOLES SHALL BE AS FOLLOWS:
   PVC PIPE: CAST OR GROUT A MANHOLE COUPLING INTO WALL.
   D.I. PIPE: BELL AND SPIGOT JOINT OR FLEXIBLE COUPLING EITHER SHALL BE 12" MAXIMUM DISTANCE FROM MANHOLE WALL.
   PVC AND D.I. PIPE, OPTIONAL: CORE THE MANHOLE AND CONNECT SEWER PIPE WITH A WATER TIGHT FLEXIBLE RUBBER BOOT IN MANHOLE WALL, KOR-N-SEAL BOOT OR EQUAL.

2. DROP OF GRADE THRU MANHOLE SHALL BE 0.10', UNLESS OTHERWISE APPROVED.

CITY OF LONG BEACH			
FORCE MAIN DISCHARGE MANHOLE			
APPROVED: BY CITY / DATE			DWG. NO. FMDMH
DATE: 8/96	DRWN: J.H.	CHKD: T.J.O.	SCALE: NONE

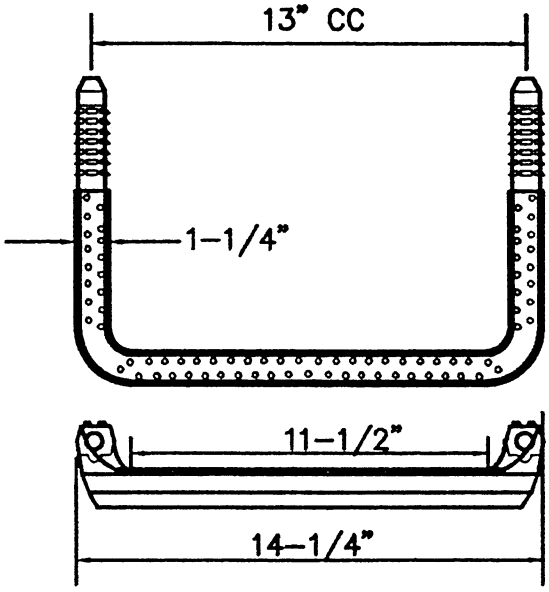

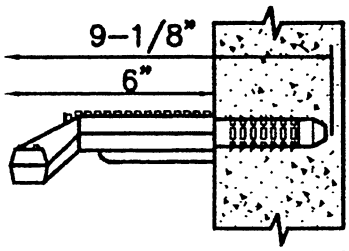

POLYPROPYLENE STEP, LANE NO. P-13938 OR EQUAL

POLYPROPYLENE MANHOLE STEPS

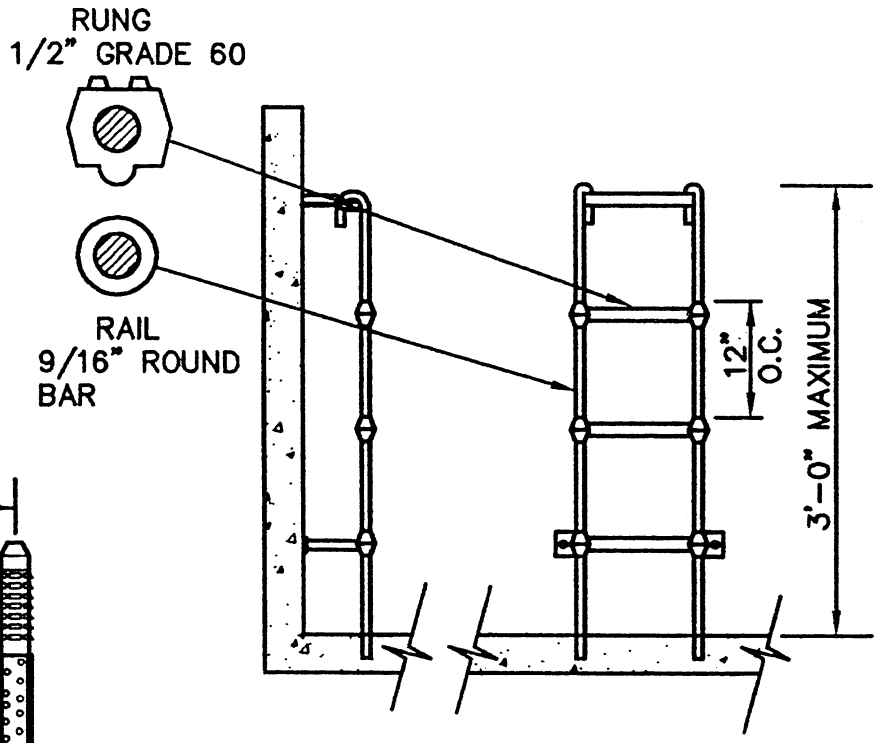

LADDER SHALL CONFORM TO POLYPROPYLENE ASTM D-4101 1/2" GRADE 60 REINFORCING BAR A-615 9/16" COLD DRAWN BAR C-1018

POLYPROPYLENE LADDER

CITY OF LONG BEACH			
POLYPROPYLENE LADDER AND MANHOLE STEPS			
APPROVED: BY CITY / DATE			DWG. NO. PLMHS
DATE: 8/96	DRWN: J.H.	CHKD: T.J.O.	SCALE: NONE

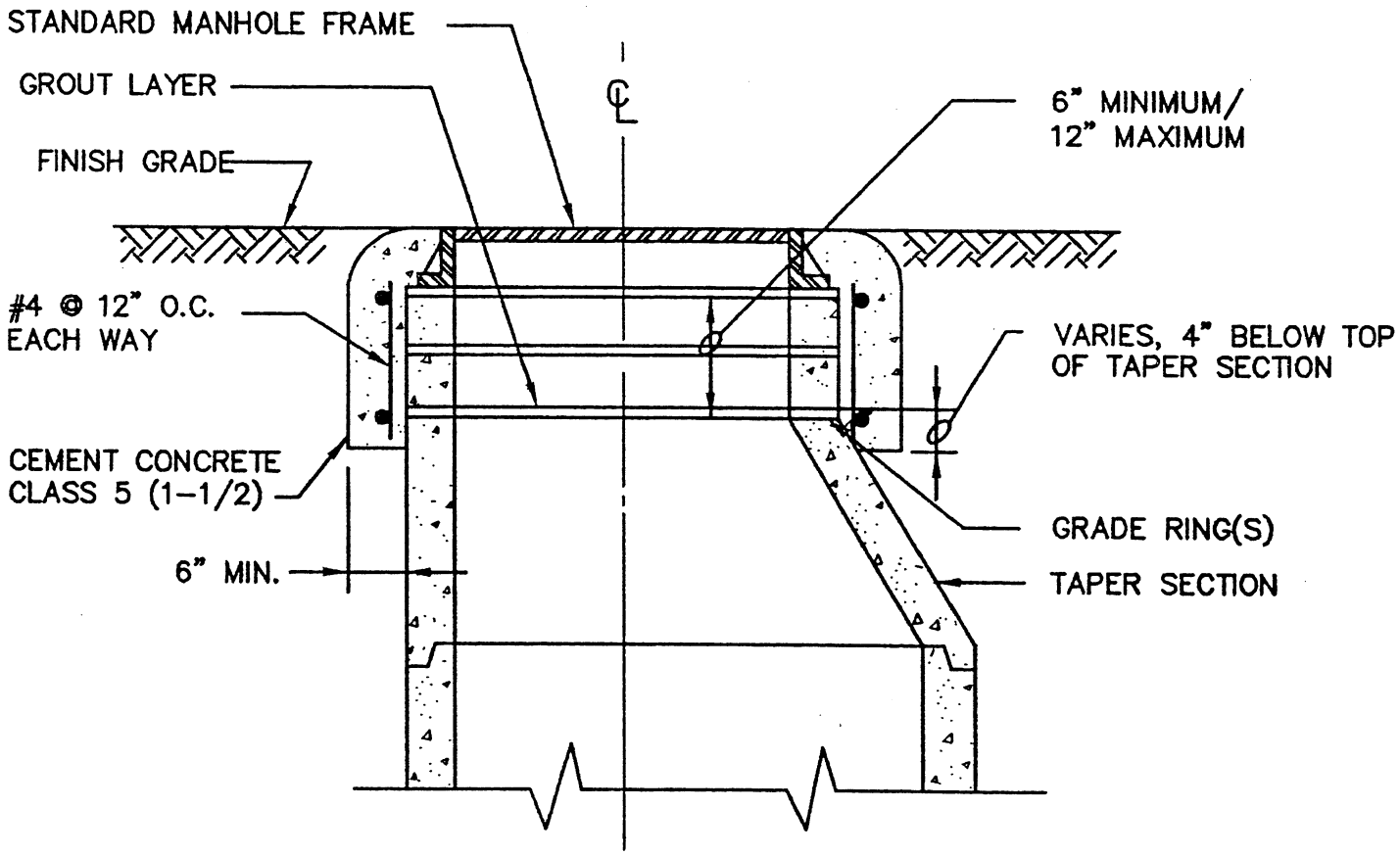

SECTION

NOTE:

CONSTRUCT CONCENTRIC CONCRETE COLLARS AROUND ALL MANHOLE FRAMES LOCATED OUTSIDE OF PAVEMENT AREAS

MANHOLE FRAME COLLAR

CITY OF PACIFIC			
MANHOLE FRAME COLLAR			
APPROVED: BY CITY / DATE			DWG. NO. MHCLAR
DATE: 8/96	DRWN: J.H.	CHKD: T.J.O.	SCALE: NONE

COVERS SHALL HAVE THE WORD "SEWER" IN RAISED LETTERS WHEN USED IN CONNECTION WITH SANITARY SEWER INSTALLATION, OR "WATER" WHEN IN CONNECTION WITH WATER DISTRIBUTION INSTALLATION.

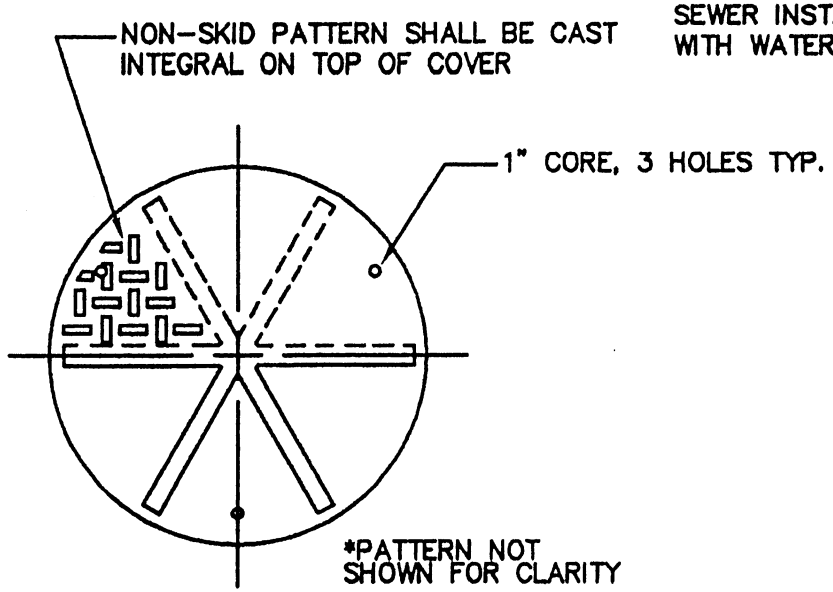

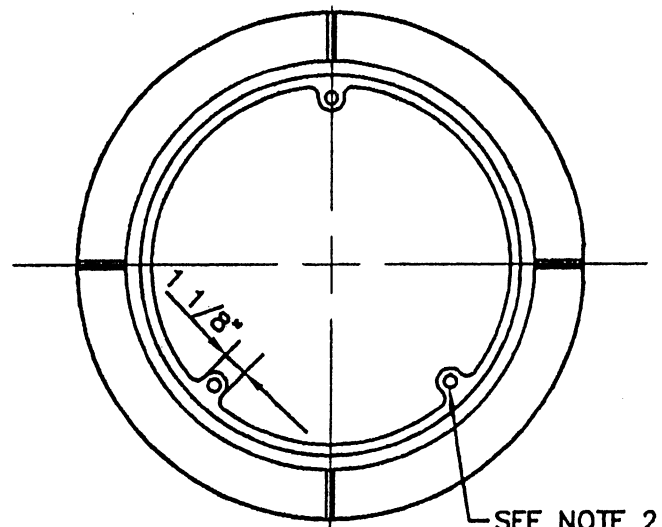

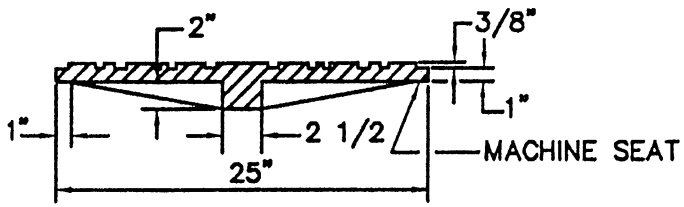

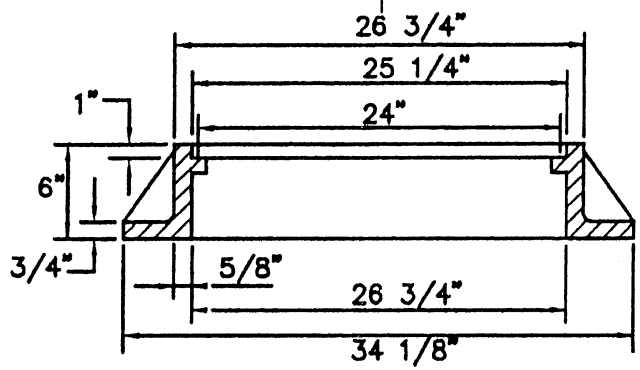

DUCTILE IRON LOCKING COVER
MINIMUM WEIGHT 180 LBS

NOTES:

1. MATERIALS ARE DUCTILE IRON ASTM A-40 CLASS 30
2. DRILL AND TAP THREE 5/8" HOLES THRU FRAME AT 120° AND 11 1/16" RADIUS
3. SATHER MANUFACTURING CO 6024-R OR OTHERWISE APPROVED EQUAL
4. WATERTIGHT MANHOLE FRAME AND COVERS MAY BE REQUIRED BASED ON LOCAL CONDITIONS.
5. ALL MANHOLES LOCATED OUTSIDE PAVEMENT AREAS SHALL BE PROVIDED WITH LOCKING MANHOLE FRAME AND COVER,

CITY OF LONG BEACH			
MANHOLE FRAME AND COVER			
APPROVED:			
BY CITY	DATE	DWG. NO. MHFC	
DATE: 8/96	DRWN: J.H.	CHKD: T.J.O.	SCALE: NONE

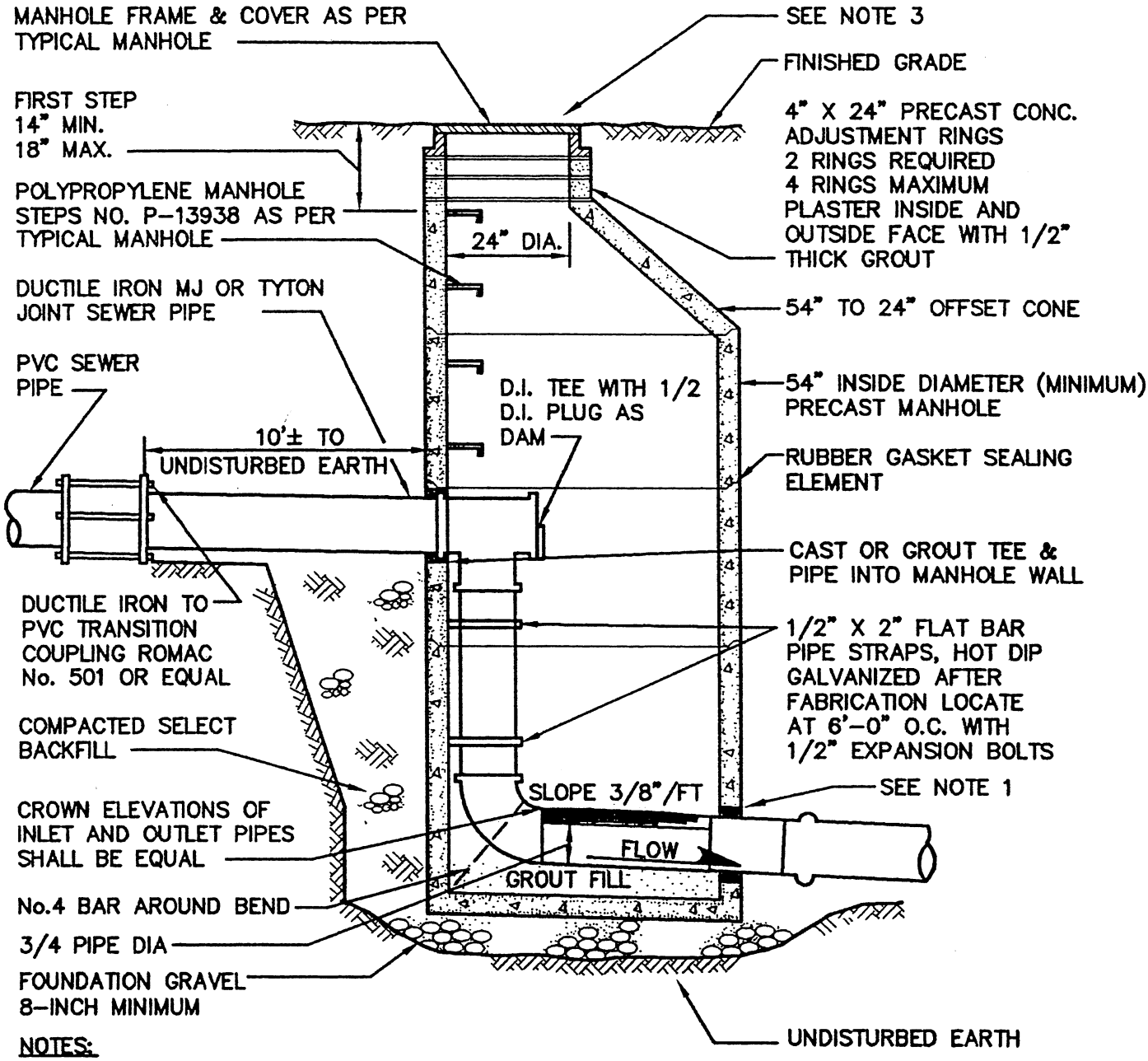

NOTES:

1. PIPE CONNECTIONS TO MANHOLES SHALL BE AS FOLLOWS:
   PVC PIPE: CAST OR GROUT A MANHOLE COUPLING INTO WALL.
   D.I. PIPE: BELL AND SPIGOT JOINT OR FLEXIBLE COUPLING EITHER SHALL BE 12" MAXIMUM DISTANCE FROM MANHOLE WALL.
   PVC AND D.I. PIPE, OPTIONAL: CORE THE MANHOLE AND CONNECT SEWER PIPE WITH A WATER TIGHT FLEXIBLE RUBBER BOOT IN MANHOLE WALL, KOR-N-SEAL BOOT OR EQUAL.
2. DROP OF GRADE THRU MANHOLE SHALL BE 0.10', UNLESS OTHERWISE APPROVED BY CITY INSPECTOR.
3. INSTALL CONCRETE COLLAR. SEE DETAIL
4. PRE-CHANNELED MANHOLE ARE NOT ACCEPTABLE

CITY OF LONG BEACH			
INSIDE DROP MANHOLE			
APPROVED: BY CITY / DATE			DWG. NO. IDMH
DATE: 8/96	DRWN: J.H.	CHKD: T.J.O.	SCALE: NONE

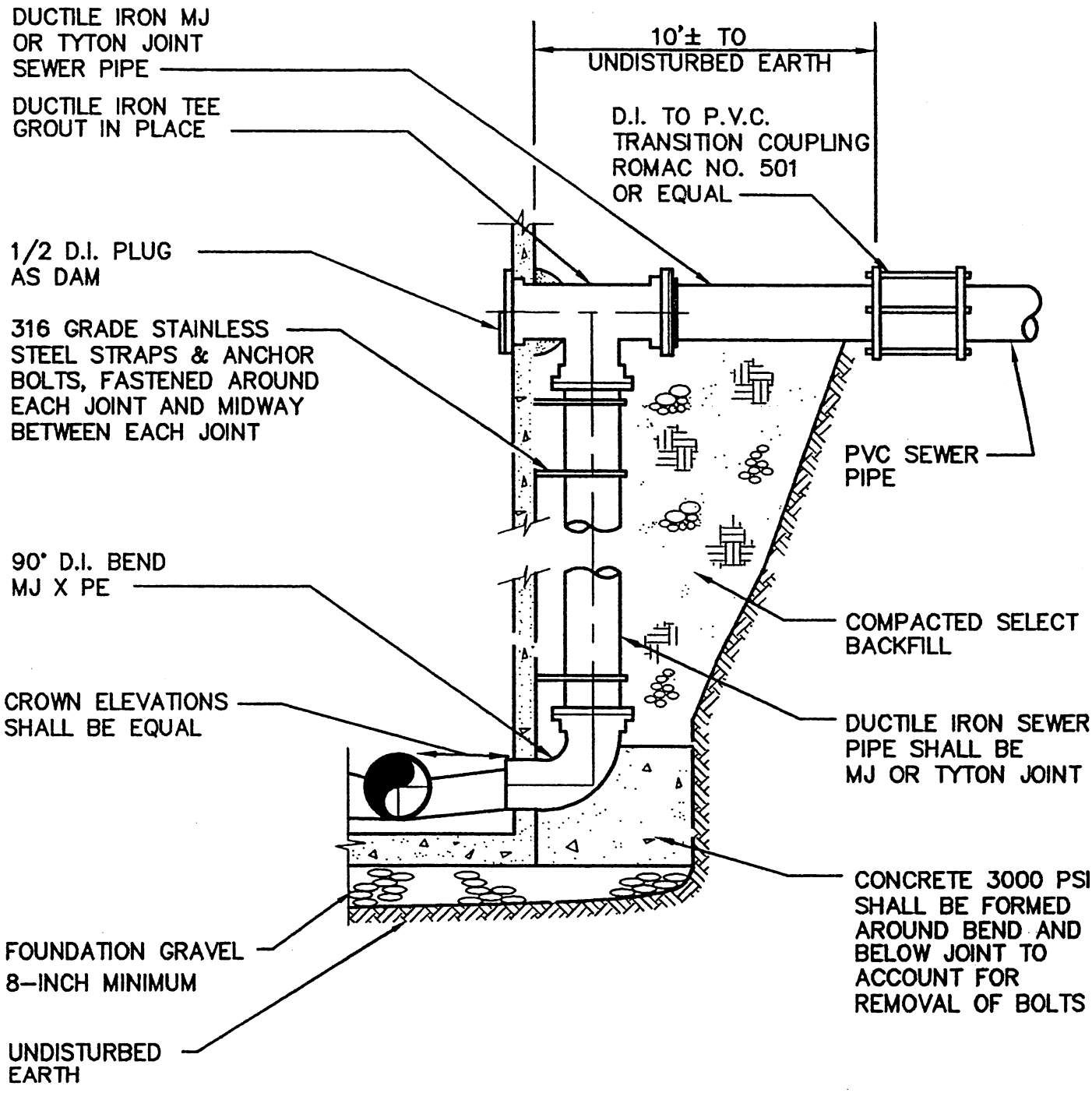

CITY OF LONG BEACH			
OUTSIDE DROP MANHOLE			
APPROVED: BY CITY / DATE			DWG. NO. ODMH
DATE: 8/96	DRWN: J.H.	CHKD: T.J.O.	SCALE: NONE

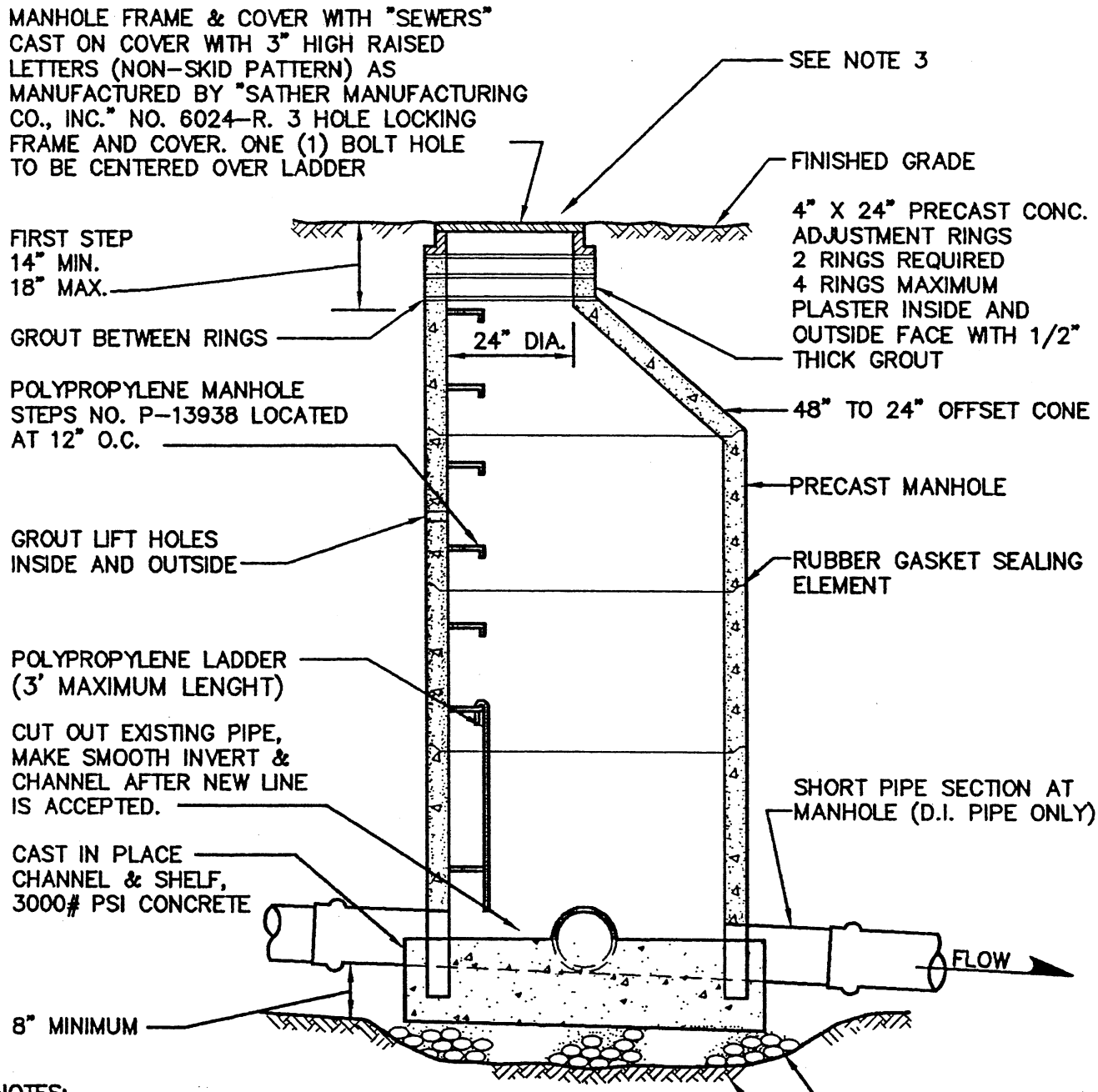

NOTES:

1. PIPE CONNECTIONS TO MANHOLES SHALL BE AS FOLLOWS:
   PVC PIPE: CAST OR GROUT A MANHOLE COUPLING INTO WALL.
   D.I. PIPE: BELL AND SPIGOT JOINT OR FLEXIBLE COUPLING EITHER SHALL BE 12" MAXIMUM DISTANCE FROM MANHOLE WALL.
   PVC AND D.I. PIPE, OPTIONAL: CORE THE MANHOLE AND CONNECT SEWER PIPE WITH A WATER TIGHT FLEXIBLE RUBBER BOOT IN MANHOLE WALL, KOR-N-SEAL BOOT OR EQUAL.
2. DROP OF GRADE THRU MANHOLE SHALL BE 0.10', UNLESS OTHERWISE APPROVED BY CITY INSPECTOR.
3. INSTALL CONCRETE COLLAR. SEE DETAIL

CITY OF LONG BEACH			
TYPICAL SADDLE MANHOLE			
APPROVED: BY CITY / DATE			DWG. NO. TSMH
DATE: 8/96	DRWN: J.H.	CHKD: T.J.O.	SCALE: NONE

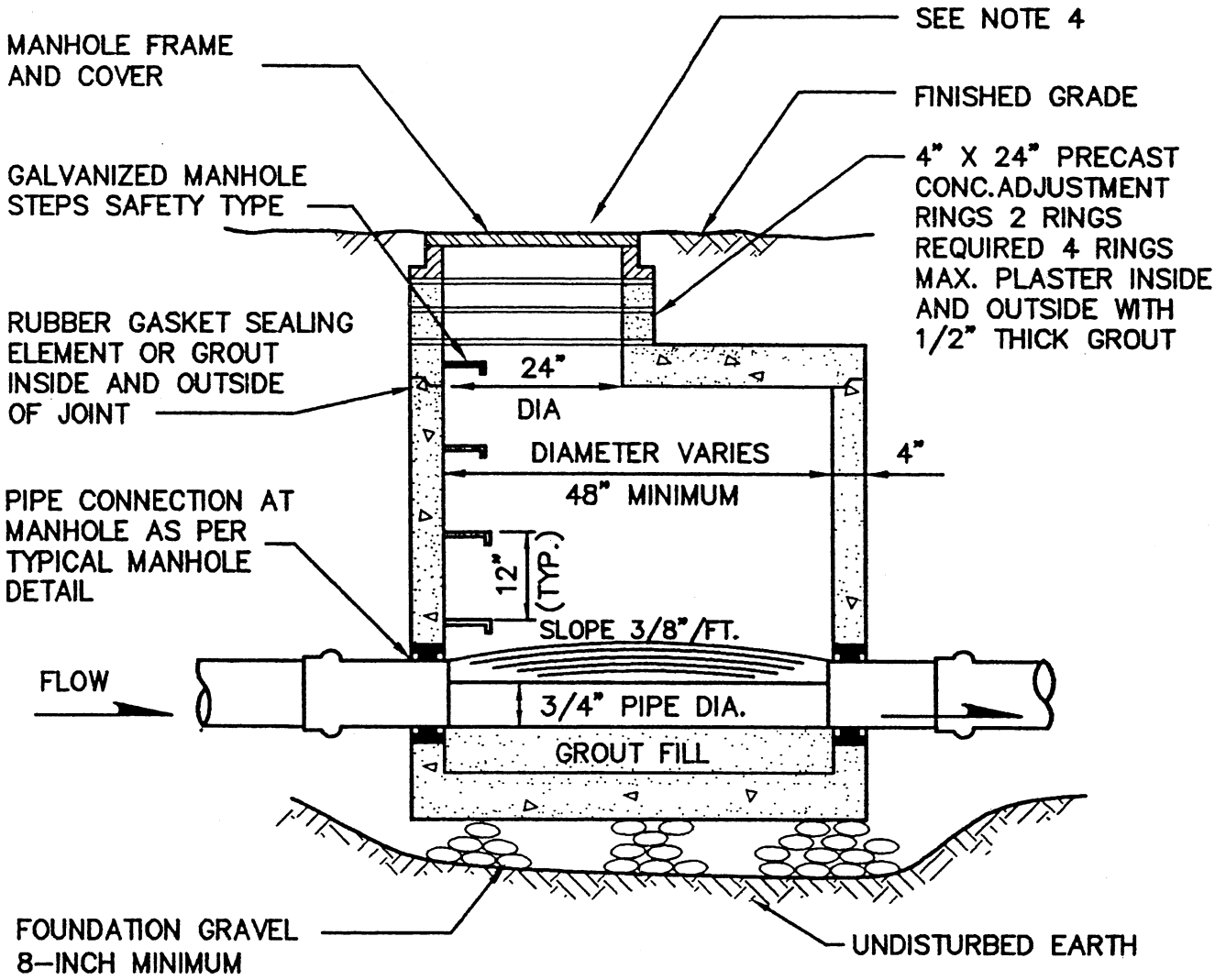

NOTES:

1. PIPE CONNECTIONS TO MANHOLES SHALL BE AS FOLLOWS:
   PVC PIPE: CAST OR GROUT A MANHOLE COUPLING INTO WALL.
   D.I. PIPE: BELL AND SPIGOT JOINT OR FLEXIBLE COUPLING EITHER SHALL BE 12" MAXIMUM DISTANCE FROM MANHOLE WALL.
   PVC AND D.I. PIPE, OPTIONAL: CORE THE MANHOLE AND CONNECT SEWER PIPE WITH A WATER TIGHT FLEXIBLE RUBBER BOOT IN MANHOLE WALL, KOR-N-SEAL BOOT OR EQUAL.
2. DROP OF GRADE THRU MANHOLE SHALL BE 0.10'.
3. PRE-CHANNELED MANHOLES ARE NOT ACCEPTABE.
4. CONSTRUCT CONCRETE COLLARS PER DETAILS.

CITY OF LONG BEACH			
TYPICAL SHALLOW PRECAST MANHOLE			
APPROVED: BY CITY / DATE			DWG. NO. TSPMH
DATE: 8/96	DRWN: J.H.	CHKD: T.J.O.	SCALE: NONE

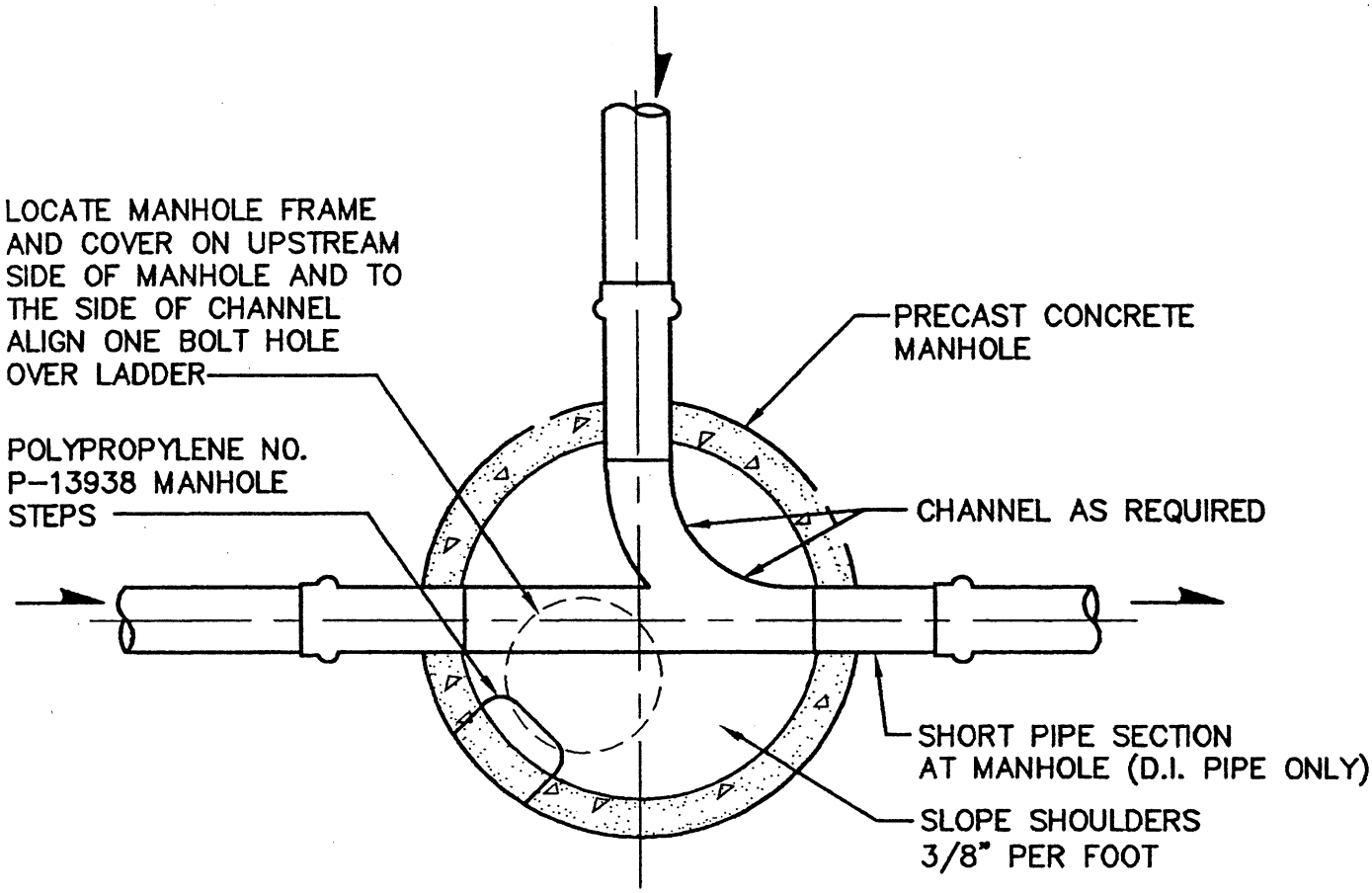

NOTE:

PIPE CONNECTIONS TO MANHOLES SHALL BE AS FOLLOWS:
PVC PIPE: CAST OR GROUT A MANHOLE COUPLING INTO WALL.
D.I. PIPE: BELL AND SPIGOT JOINT OR FLEXIBLE COUPLING.
EITHER SHALL BE 12" MAXIMUM DISTANCE FROM MANHOLE WALL.
PVC AND D.I. PIPE, OPTIONAL: CORE THE MANHOLE AND CONNECT SEWER PIPE WITH A WATER TIGHT FLEXIBLE RUBBER BOOT IN MANHOLE WALL, KOR-N- SEAL BOOT OR EQUAL.
ALL CONNECTIONS TO EXISTING MANHOLES SHALL BE MADE WITH A CONCRETE CORING MACHINE UNLESS OTHERWISE APPROVED BY THE CITY.

CITY OF LONG BEACH			
TYPICAL MANHOLE PLAN			
APPROVED: BY CITY / DATE			DWG. NO. TMHP
DATE: 8/96	DRWN: J.H.	CHKD: T.J.O.	SCALE: NONE

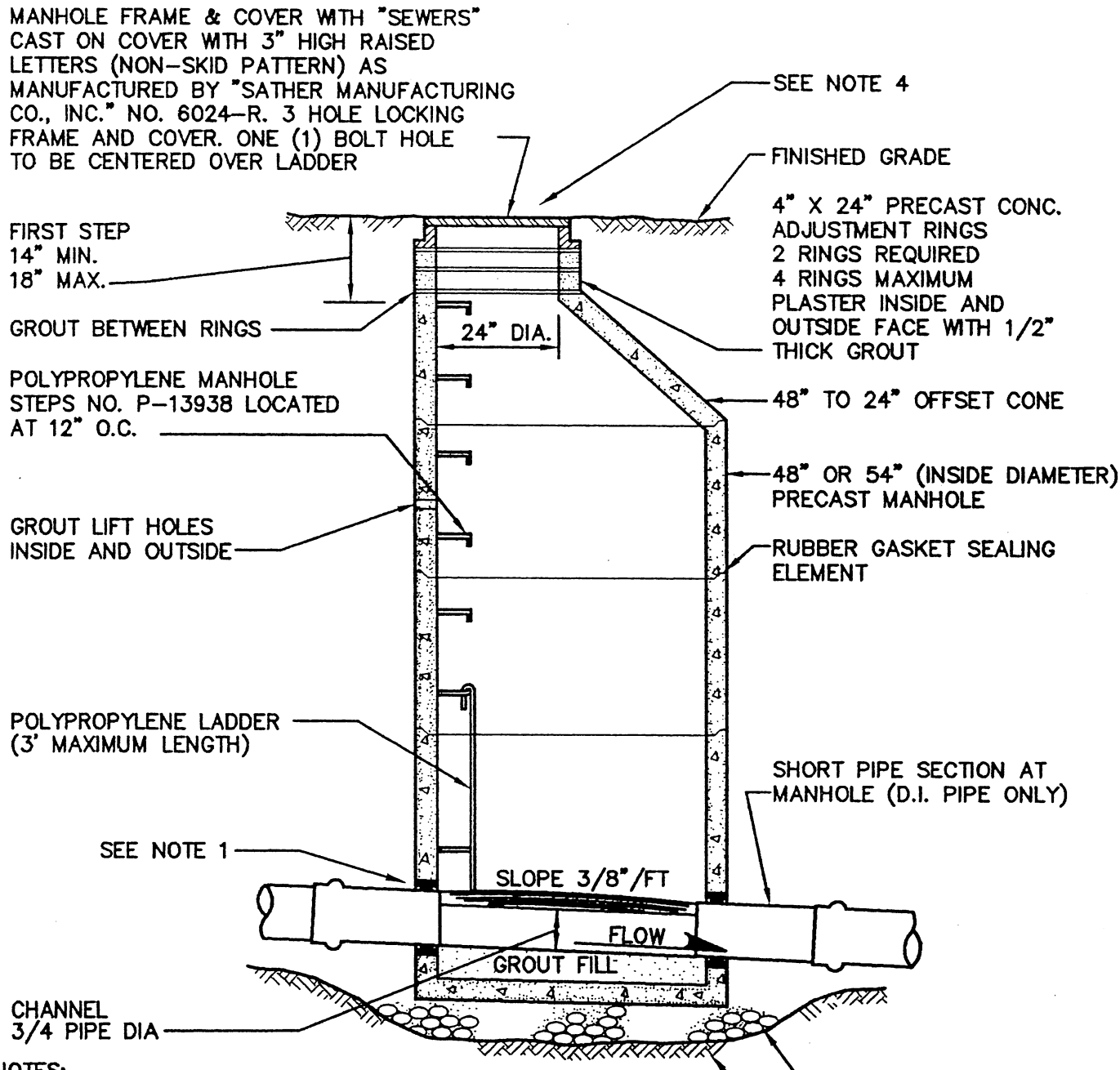

NOTES:

1. PIPE CONNECTIONS TO MANHOLES SHALL BE AS FOLLOWS:
   PVC PIPE: CAST OR GROUT A MANHOLE COUPLING INTO WALL.
   D.I. PIPE: BELL AND SPIGOT JOINT OR FLEXIBLE COUPLING EITHER SHALL BE 12" MAXIMUM DISTANCE FROM MANHOLE WALL.
   PVC AND D.I. PIPE, OPTIONAL: CORE THE MANHOLE AND CONNECT SEWER PIPE WITH A WATER TIGHT FLEXIBLE RUBBER BOOT IN MANHOLE WALL, KOR-N-SEAL BOOT OR EQUAL.
2. DROP OF GRADE THRU MANHOLE SHALL BE 0.10', UNLESS OTHERWISE REQUIRED/ APPROVED BY CITY ENGINEER.
3. LARGER MANHOLES WILL BE REQUIRED AT THE DISCRETION OF THE CITY ENGINEER BASED ON PIPE SIZE, NUMBER AND ORIENTATION OF PIPE(S).
4. INSTALL CONCRETE COLLAR. SEE DETAIL.
5. PRE-CHANNELED MANHOLES ARE NOT ACCEPTABLE.

CITY OF LONG BEACH			
TYPICAL PRECAST MANHOLE			
APPROVED: BY CITY / DATE			DWG. NO. TPMH
DATE: 8/96	DRWN: J.H.	CHKD: T.J.O.	SCALE: NONE

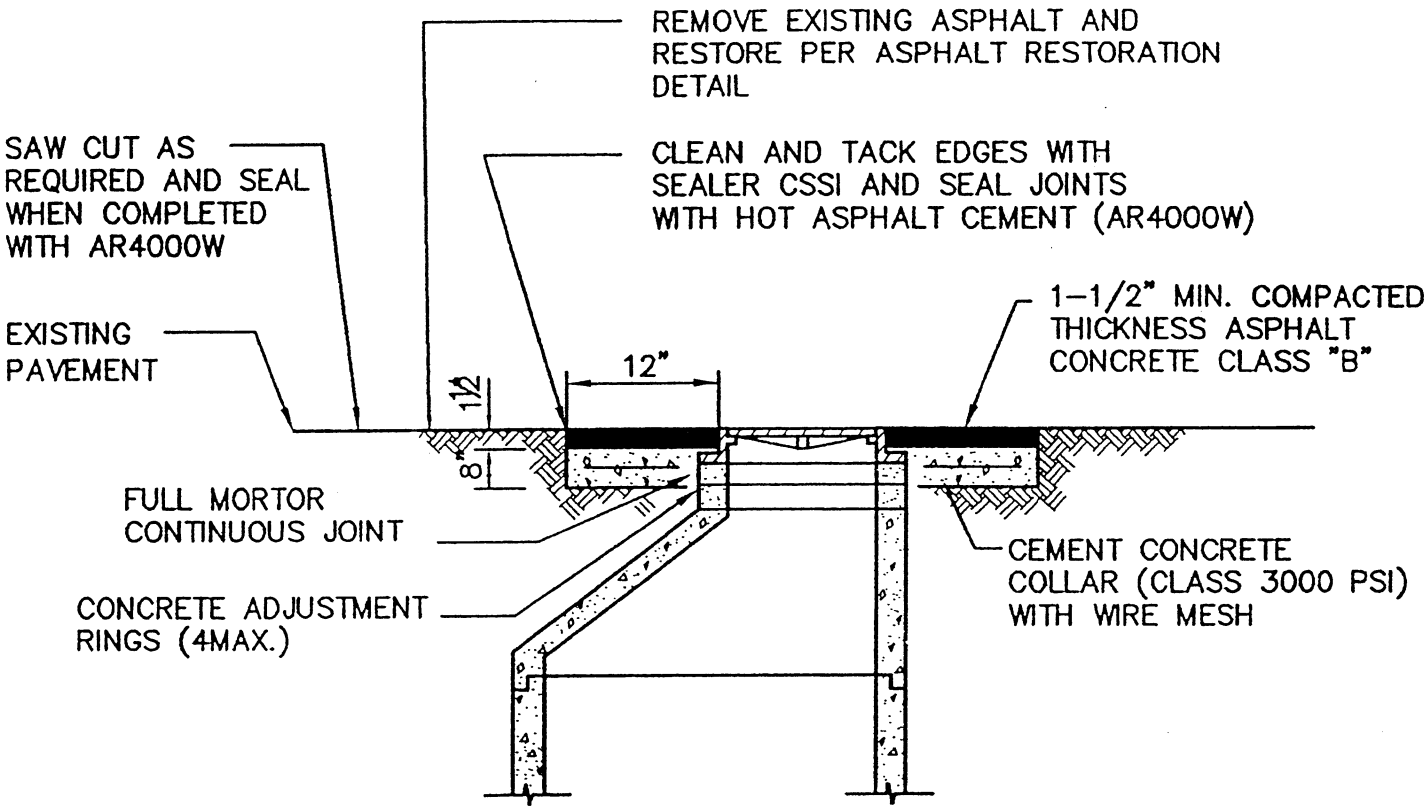

CITY OF LONG BEACH			
MANHOLE, OR CATCH BASIN (TYPE II) GRADE ADJUSTMENT DETAIL			
APPROVED: BY CITY / DATE			DWG. NO. STOM-2
DATE: 8/96	DRWN: J.H.	CHKD: T.J.O.	SCALE: NONE

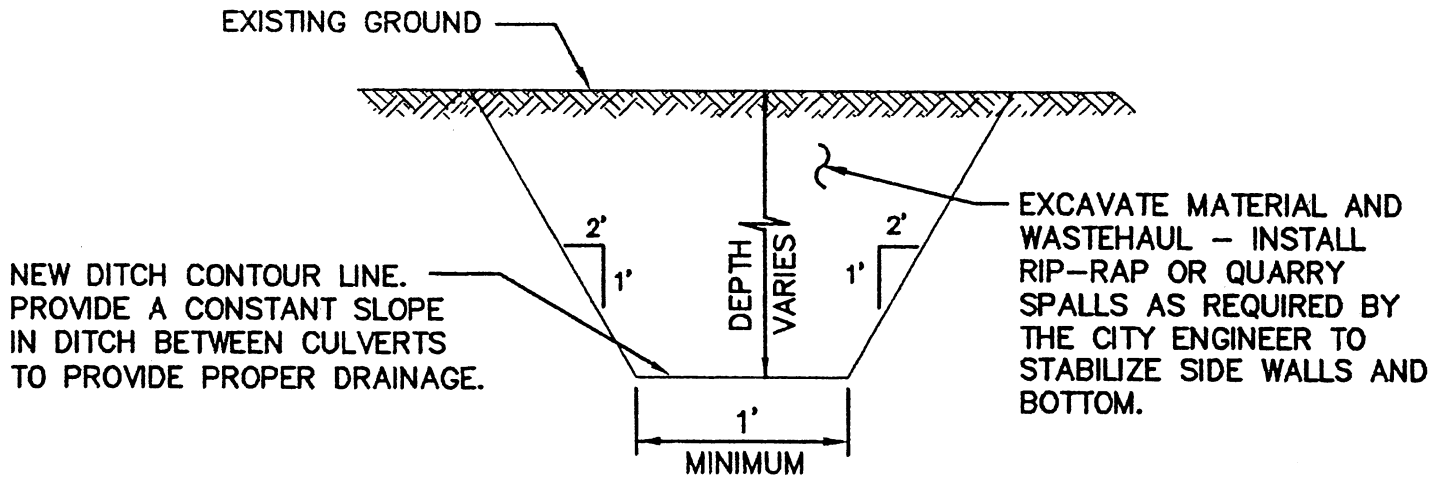

CITY OF LONG BEACH			
NEW DITCH CONSTRUCTION			
APPROVED: BY CITY / DATE			DWG. NO. STOM–5
DATE: 8/96	DRWN: J.H.	CHKD: T.J.O.	SCALE: NONE

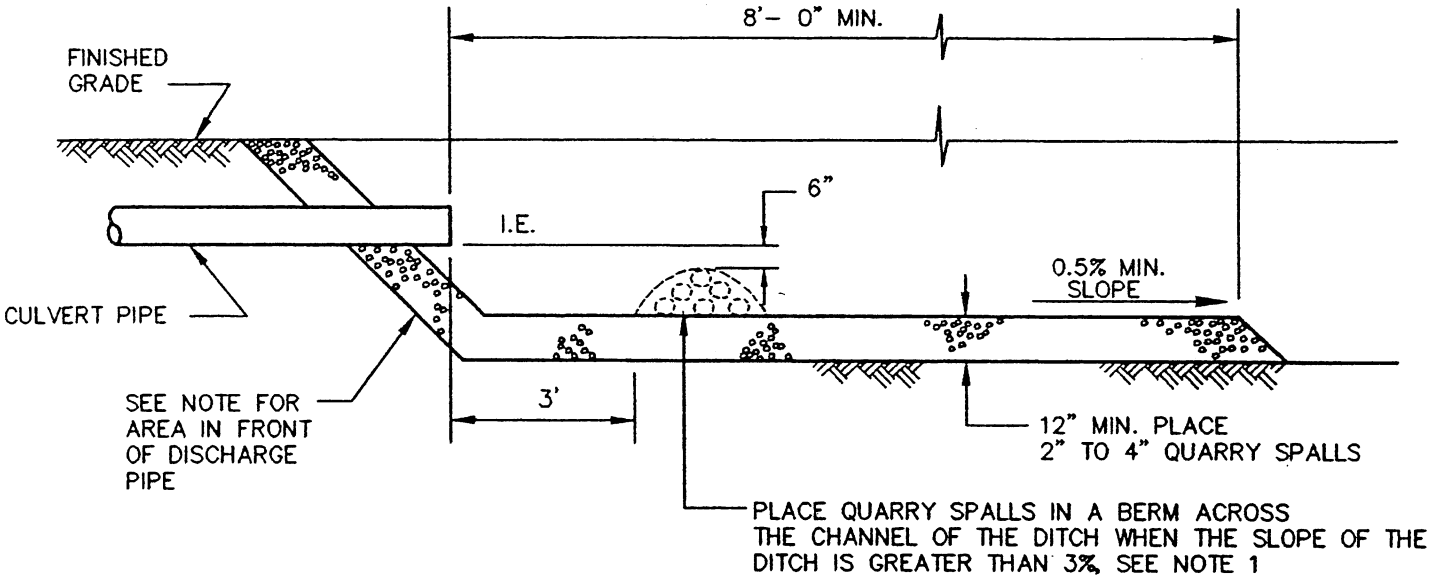

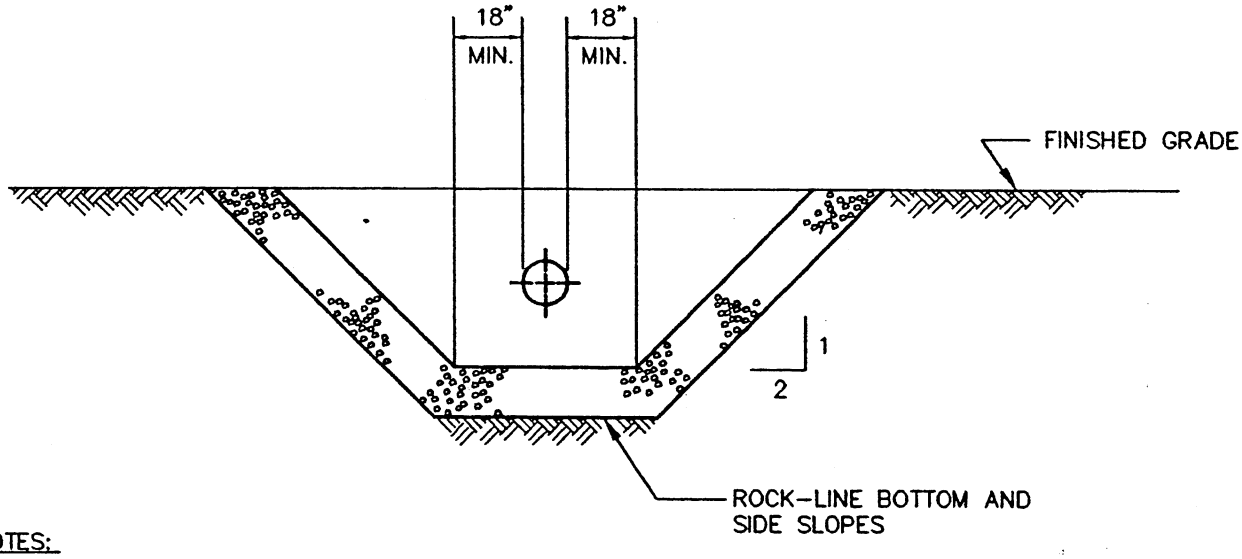

NOTES:

1. PLACE QUARRY SPALLS IN FRONT OF CULVERT DISCHARGE, ENGINEER SHALL SIZE QUARRY SPALL BERM

RIPRAP AND ENERGY DISSIPATION FOR DITCH

CITY OF LONG BEACH			
RIPRAP AND ENERGY DISSIPATION FOR DITCH			
APPROVED: BY CITY / DATE			DWG. NO. DTCH-2
DATE: 8/96	DRWN: J.H.	CHKD: T.J.O.	SCALE: NONE

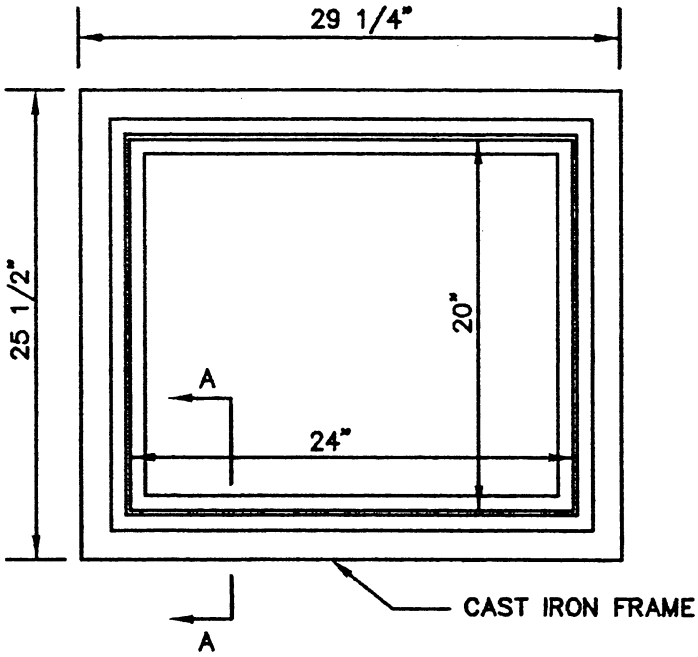

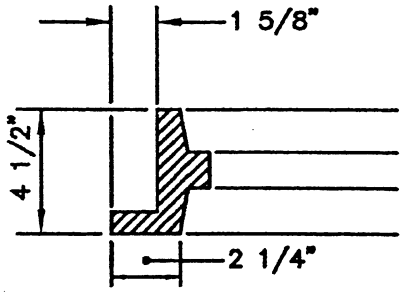

SECTION A–A

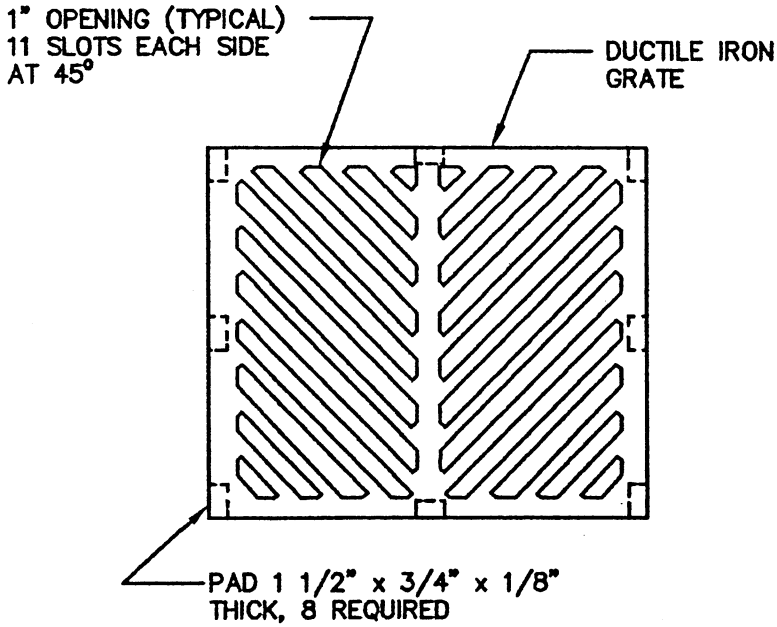

NOTES:

1. MATERIAL SHALL CONFORM TO THE "1994 STANDARD SPECIFICATIONS FOR ROAD, BRIDGE AND MUNICIPAL CONSTRUCTION" PREPARD BY THE WASHINGTON STATE DEPARTMENT OF TRANSPORTATION AND AMERICAN PUBLIC WORKS ASSOCIATION, WASHINGTON STATE CHAPTER.

2. WHEN ROAD PROFILE, EXCEED 6% "VANED" GRATES SHALL BE INSTALLED IN LIEU OF THE STANDARD FRAME AND GRATE, AT THE DISCRETION OF THE CITY

CITY OF LONG BEACH			
CATCH BASIN FRAME AND GRATE			
APPROVED: BY CITY / DATE			DWG. NO. STOM–3
DATE: 8/96	DRWN: J.H.	CHKD: T.J.O.	SCALE: NONE

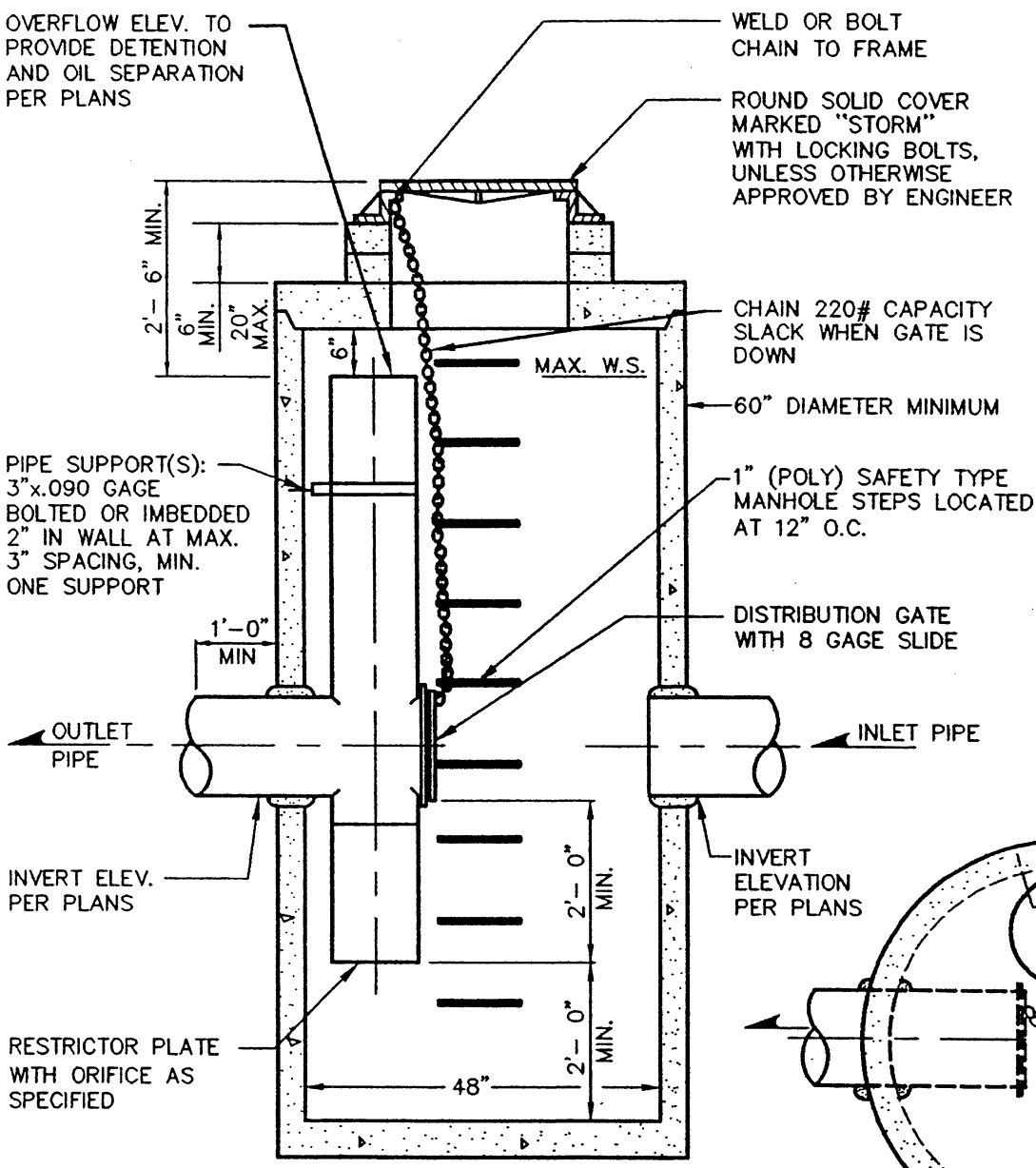

SECTION VIEW

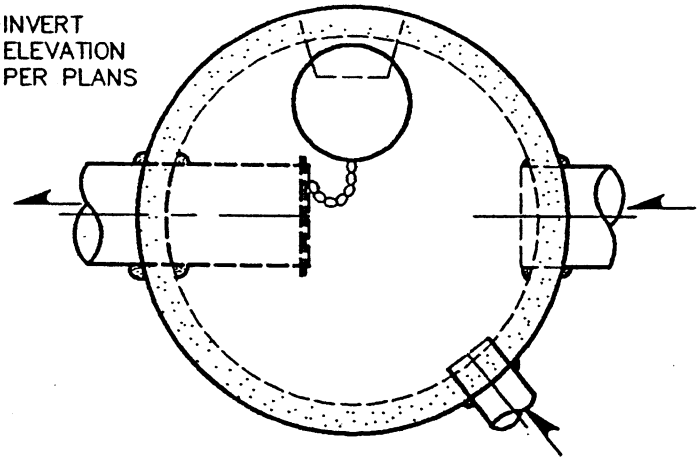

PLAN VIEW

FLOW RESTRICTOR CATCH BASIN TYPE 2

NOTES:

1. PIPE SIZES AND SLOPES: PER APPROVED PLANS
2. OUTLET CAPACITY: NOT LESS THAN COMBINED INLETS
3. METAL PARTS: CORROSION RESISTANT. GALVANIZED PIPE PARTS TO HAVE ASPHALT TREATMENT 1
4. FRAME AND LADDER OR STEPS OFFSET SO:
   A. CLEANOUT GATE IS VISIBLE FROM TOP
   B. CLIMB-DOWN SPACE IS CLEAR OF RISER AND CLEANOUT GATE
   C. FRAME IS CLEAR OF CURB
5. IF METAL OUTLET PIPE CONNECTS TO CEMENT CONCRETE PIPE: OUTLET PIPE TO HAVE SMOOTH O.D. EQUAL TO CONCRETE PIPE I.D. LESS 1/4"

CITY OF LONG BEACH			
FLOW RESTRICTOR CATCH BASIN TYPE 2			
APPROVED: BY CITY / DATE			DWG. NO. CB-2
DATE: 8/96	DRWN: J.H.	CHKD: T.J.O.	SCALE: NONE

NOTES:

1. CATCH BASINS SHALL BE CONSTRUCTED IN ACCORDANCE WITH ASTM C478 (AASHTO M199) AND ASTM C890 UNLESS OTHERWISE SHOWN ON PLANS OR NOTED IN THE STANDARD SPECIFICATIONS.
2. HANDHOLDS IN ADJUSTMENT SECTION SHALL HAVE 3" MIN. CLEARANCE. STEPS IN CATCH BASIN SHALL HAVE 6" MIN. CLEARANCE. CATCH BASIN DETAILS. HANDHOLDS SHALL BE PLACED IN ALTERNATING GRADE RINGS OR LEVELING BRICK COURSE WITH A MIN. OF ONE HANDHOLD BETWEEN THE LAST STEP AND TOP OT THE FINISHED GRADE.
3. ALL REINFORCED CAST-IN-PLACE CONCRETE SHALL BE CLASS 4000. ALL PRECAST CONCRETE SHALL BE CLASS 4000.
4. PRECAST BASES SHALL BE FURNISHED WITH CUTOUTS OR KNOCKOUTS. KNOCKOUTS SHALL HAVE WALL THICKNESS OF 2" MIN. UNUSED KNOCKOUTS NEED NOT BE GROUTED IF WALL IS LEFT INTACT. PIPES SHALL BE INSTALLED ONLY IN FACTORY KNOCKOUTS UNLESS OTHERWISE APPROVED BY THE ENGINEER.
5. KNOCKOUT OR CUTOUT HOLE SIZE SHALL EQUAL PIPE OUTER DIAM. PLUS CATCH BASIN WALL THICKNESS. MAX. HOLE SIZE SHALL BE 36" FOR 48" CATCH BASIN, 42" FOR 54" C.B., 48" FOR 60" C.B., 60" FOR 72" C.B., 84" FOR 96" C.B. MIN. DISTANCE BETWEEN HOLES SHALL BE 8" FOR 48", 54", AND 60" C.B.; 12" FOR 72" AND 96" C.B.
6. CATCH BASIN FRAMES AND GRATES OR COVERS SHALL BE IN ACCORDANCE WITH SEC. 7.05 OF THE STANDARD SPECIFICATIONS. MATING SURFACES SHALL BE FINISHED TO ASSURE NON-ROCKING FIT WITH ANY COVER POSITION.
7. ALL BASE REINFORCING STEEL SHALL HAVE A MIN. YIELD STRENGTH OF 60,000 PSI AND BE PLACED IN THE UPPER HALF OF THE BASE WITH 1" MIN. CLEARANCE.
8. MIN. SOIL BEARING VALUE SHALL EQUAL 3,300 POUNDS PER SQUARE FOOT.
9. FOR DETAILS SHOWING LADDER, STEPS, HANDRAILS AND TOP SLABS, SEE OTHER STANDARD DETAILS.
10. SEE THE STANDARD SPECIFICATIONS SEC. 7-05.3 FOR JOINT REQUIREMENTS.

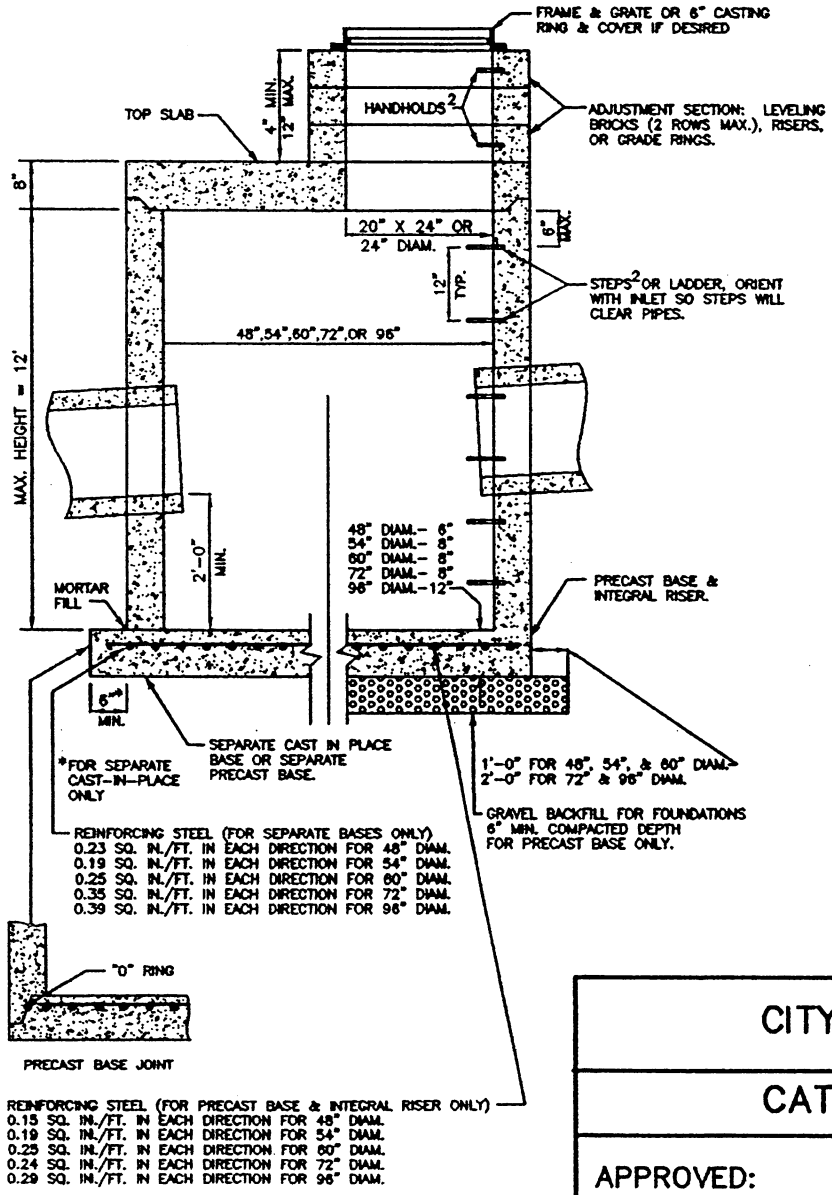

CITY OF LONG BEACH			
CATCH BASIN TYPE II			
APPROVED: BY CITY / DATE			DWG. NO. CB-TP2
DATE: 8/96	DRWN: J.H.	CHKD: T.J.O.	SCALE: NONE

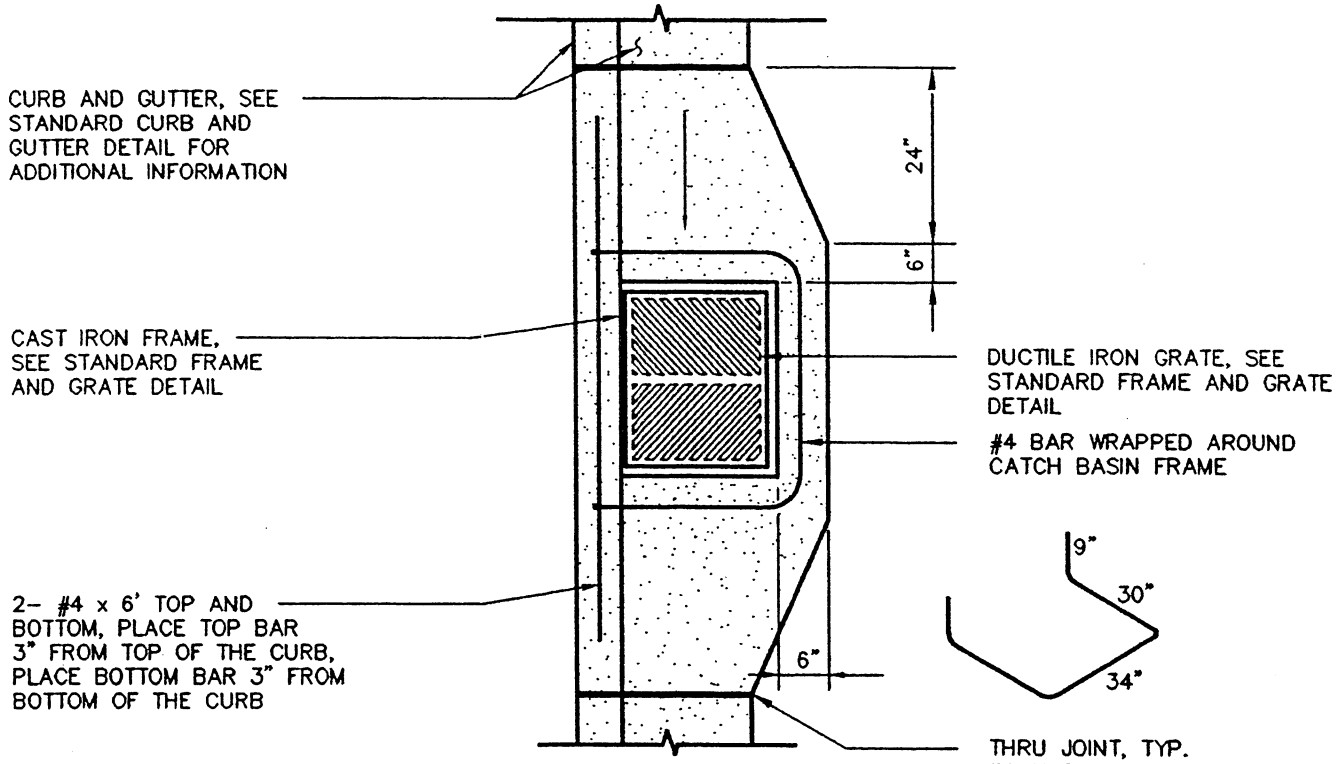

PLAN

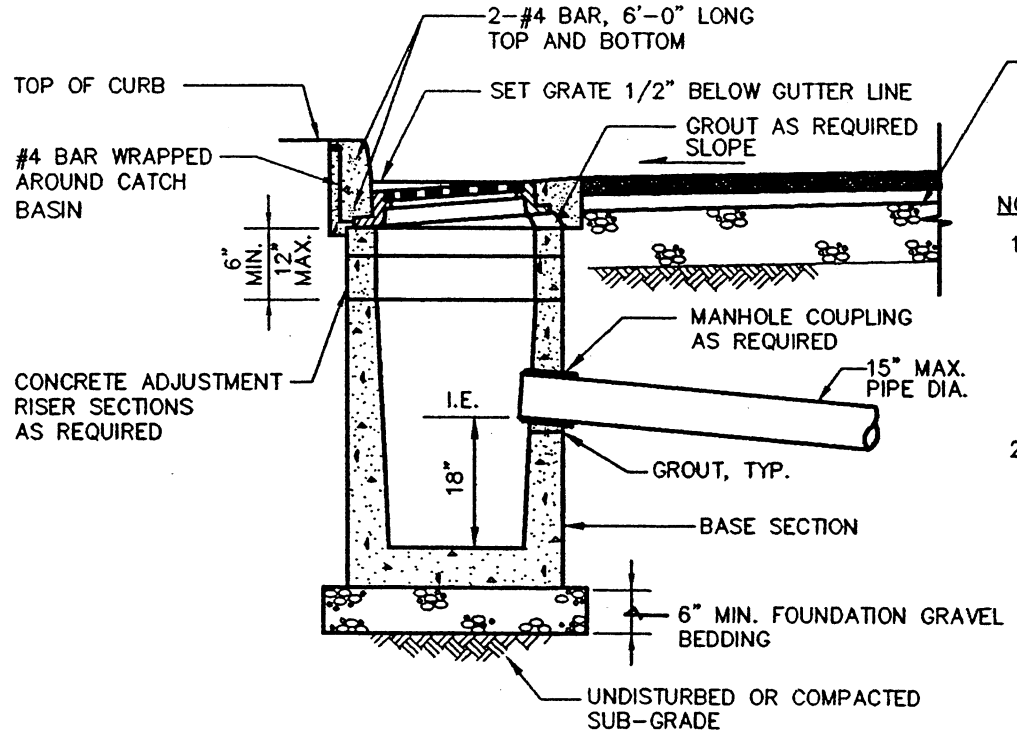

NOTES:

1. CATCH BASINS SHALL BE SPACED PER MINIMUM CITY DESIGN STANDARDS
2. TYPE I CATCH BASIN IS USED FOR DEPTHS LESS THAN 5'-0" FROM THE TOP OF THE GRATE TO I.E. (INVERT)

ELEVATION

CATCH BASIN TYPE I

CITY OF LONG BEACH			
CATCH BASIN TYPE I			
APPROVED: BY CITY / DATE			DWG. NO. CB-1
DATE: 8/96	DRWN: J.H.	CHKD: T.J.O.	SCALE: NONE

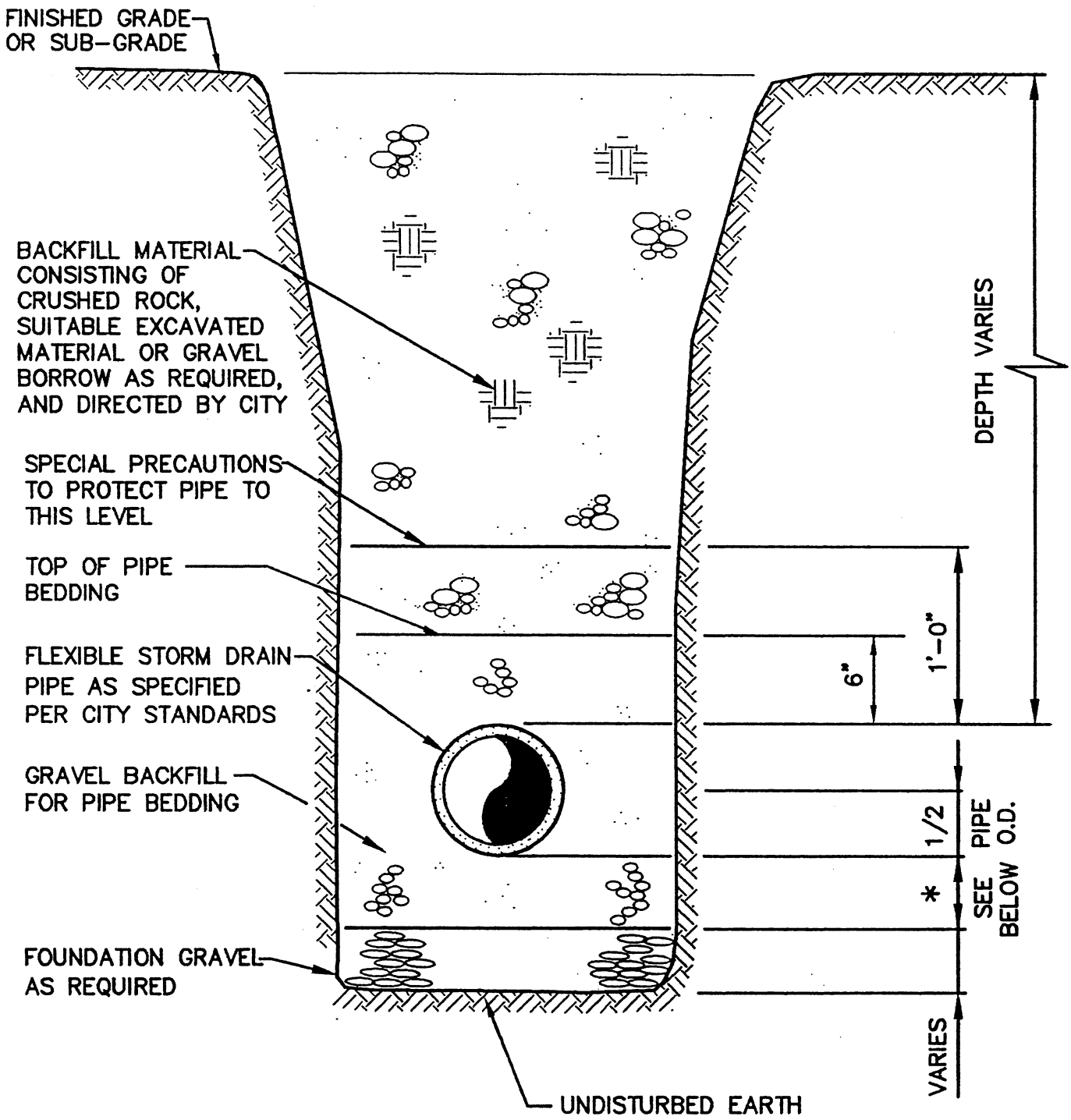

* 4-INCHES FOR PIPE 18-INCH DIA. AND LESS 6-INCHES FOR PIPE GREATER THAN 18-INCH DIA.

CITY OF LONG BEACH			
FLEXIBLE STORM DRAIN PIPE TRENCH SECTION			
APPROVED: BY CITY / DATE			DWG. NO. STOM-6
DATE: 8/96	DRWN: J.H.	CHKD: T.J.O.	SCALE: NONE

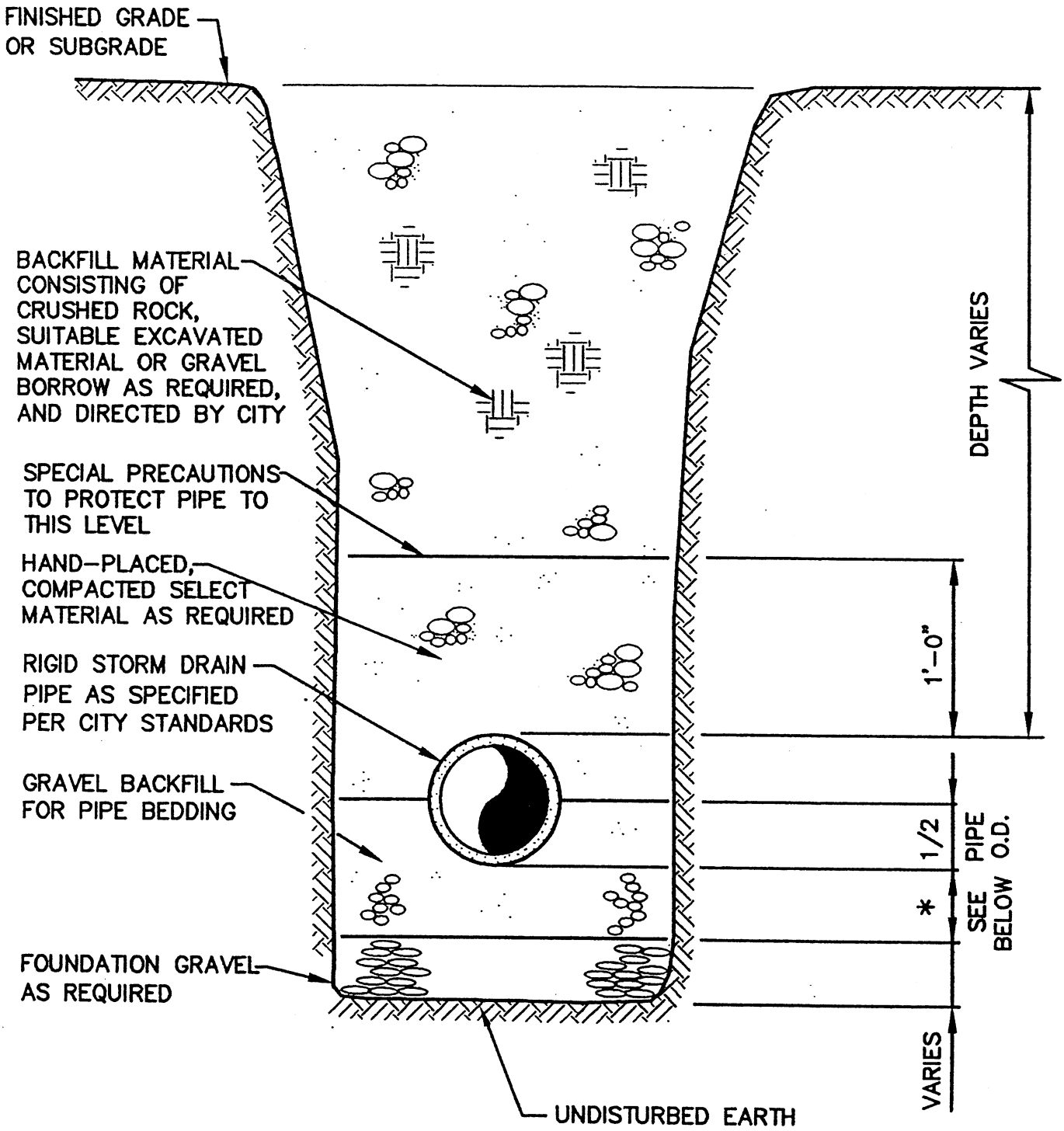

* 4-INCHES FOR PIPE 18-INCH DIA. AND LESS 6-INCHES FOR PIPE GREATER THAN 18-INCH DIA.

CITY OF LONG BEACH			
RIGID STORM DRAIN PIPE TRENCH SECTION			
APPROVED: BY CITY / DATE			DWG. NO. STOM-1
DATE: 8/96	DRWN: J.H.	CHKD: T.J.O.	SCALE: NONE

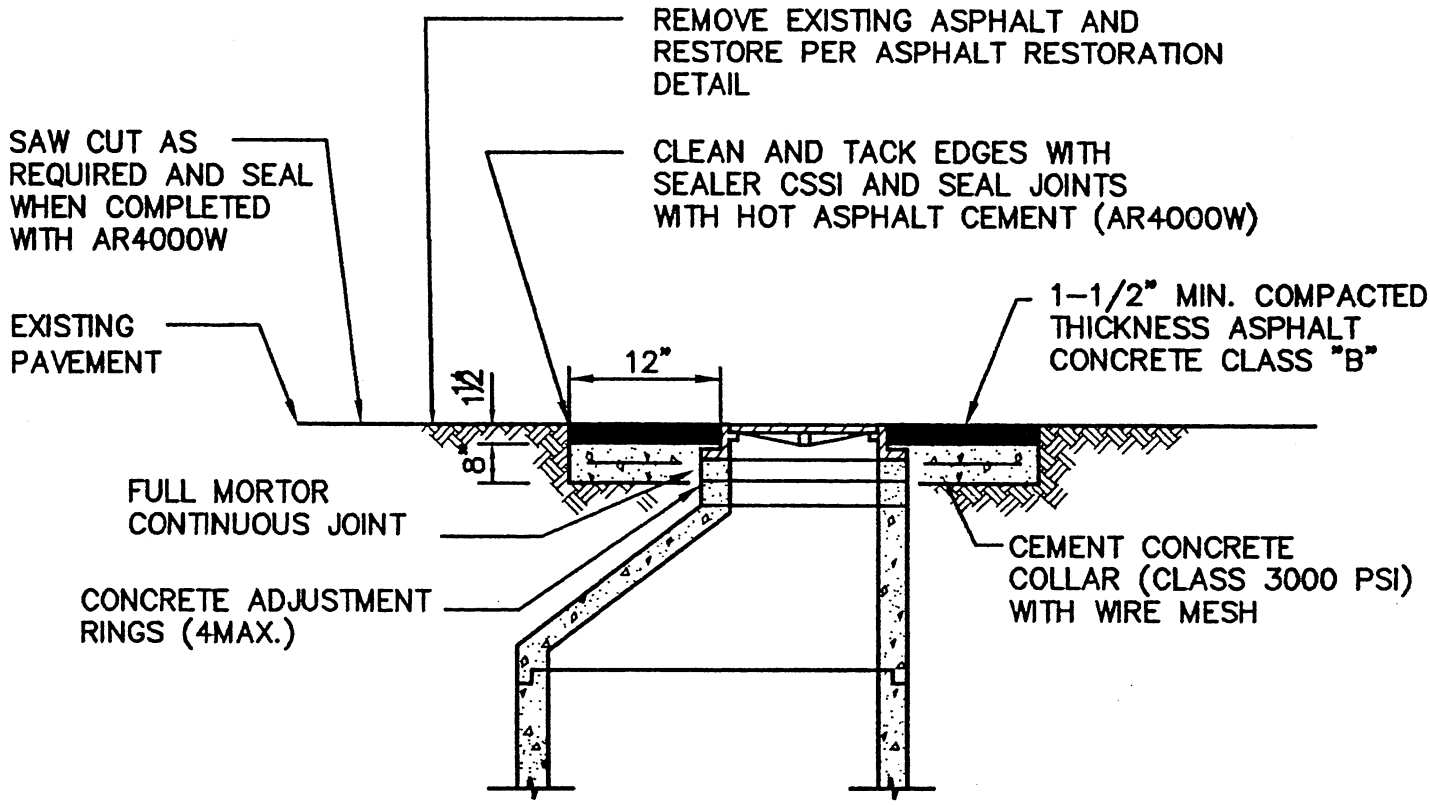

CITY OF LONG BEACH			
MANHOLE, OR CATCH BASIN (TYPE II) GRADE ADJUSTMENT DETAIL			
APPROVED: BY CITY / DATE			DWG. NO. STOM-2
DATE: 8/96	DRWN: J.H.	CHKD: T.J.O.	SCALE: NONE

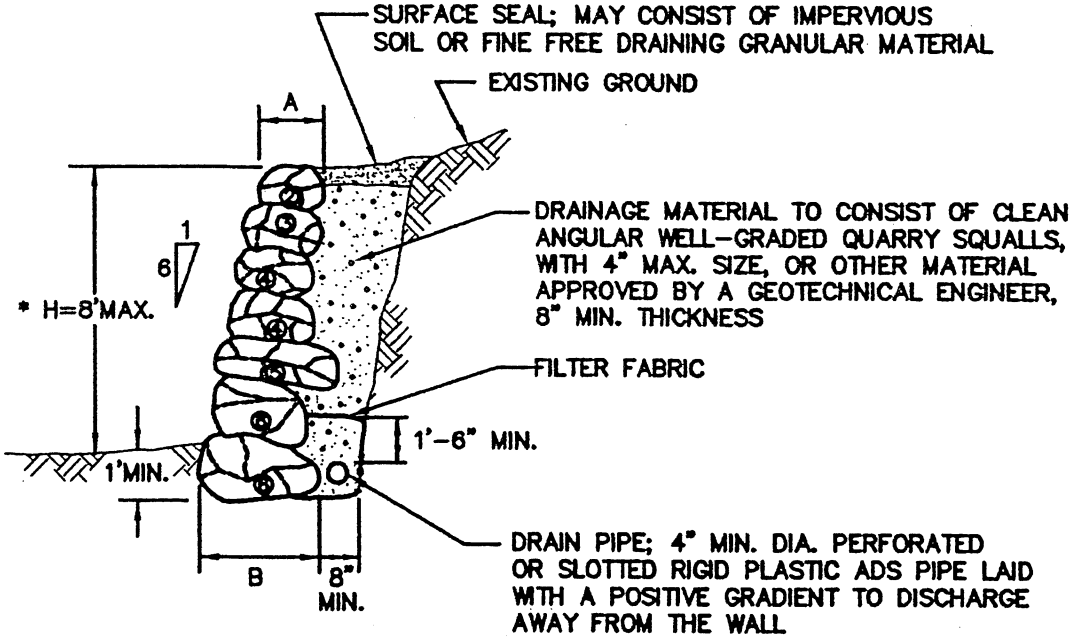

SECTION

SIZE	APPROXIMATE WEIGHT – LBS.	APPROXIMATE DIAMETER
1 MAN	50–200	12"– 18"
2 MAN	200–700	18"– 28"
3 MAN	700–2000	28"– 36"
4 MAN	2000–4000	36"– 48"
5 MAN	4000–6000	48"– 54"
6 MAN	6000–8000	54"– 50"

* NOTE:
4' MIN. HIGH CYCLONE FENCE REQUIRED ABOVE WALL WHEN WALL HEIGHT IS 3' OR GREATER

H	B	A	REVISIONS
6'– 0" OR LESS	3'– 0"	2'– 0"	
6'– 0' H≤ 8'– 0"	4'– 4"	3'– 0"	

ROCKERY SCHEDULE

ROCK WALL DETAIL

CITY OF LONG BEACH			
ROCK WALL DETAIL			
APPROVED: BY CITY / DATE			DWG. NO. RKWL
DATE: 8/96	DRWN: J.H.	CHKD: T.J.O.	SCALE: NONE

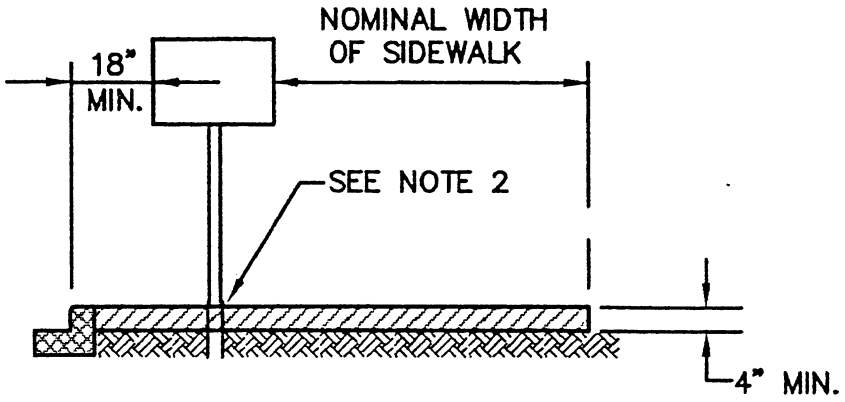

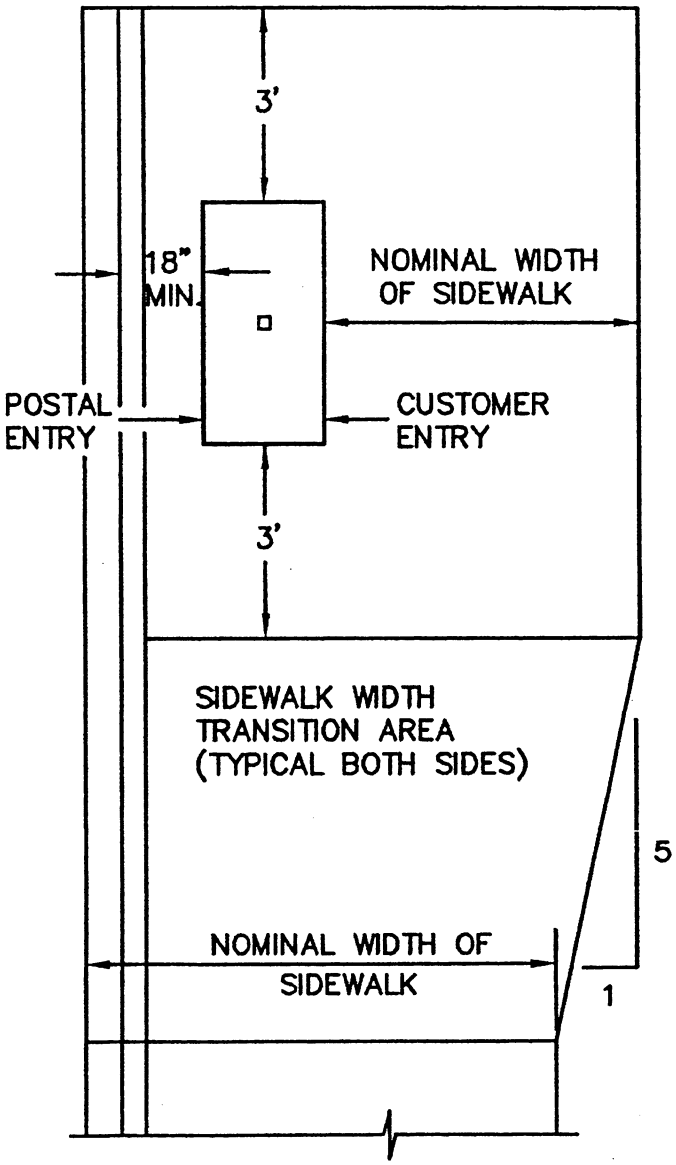

GENERAL NOTES:

1. SEE DEVELOPMENT GUIDELINES FOR ADDITIONAL REQUIREMENTS
2. PROVIDE REINFORCED GALVANIZED SLEEVE PLANTED FIRMLY IN GROUND AND THROUGH SIDEWALL (USE JOINT FILLER AROUND SLEEVE).

CITY OF LONG BEACH			
MAILBOX DETAIL			
APPROVED: BY CITY / DATE			DWG. NO. ML-1
DATE: 8/96	DRWN: J.H.	CHKD: T.J.O.	SCALE: NONE

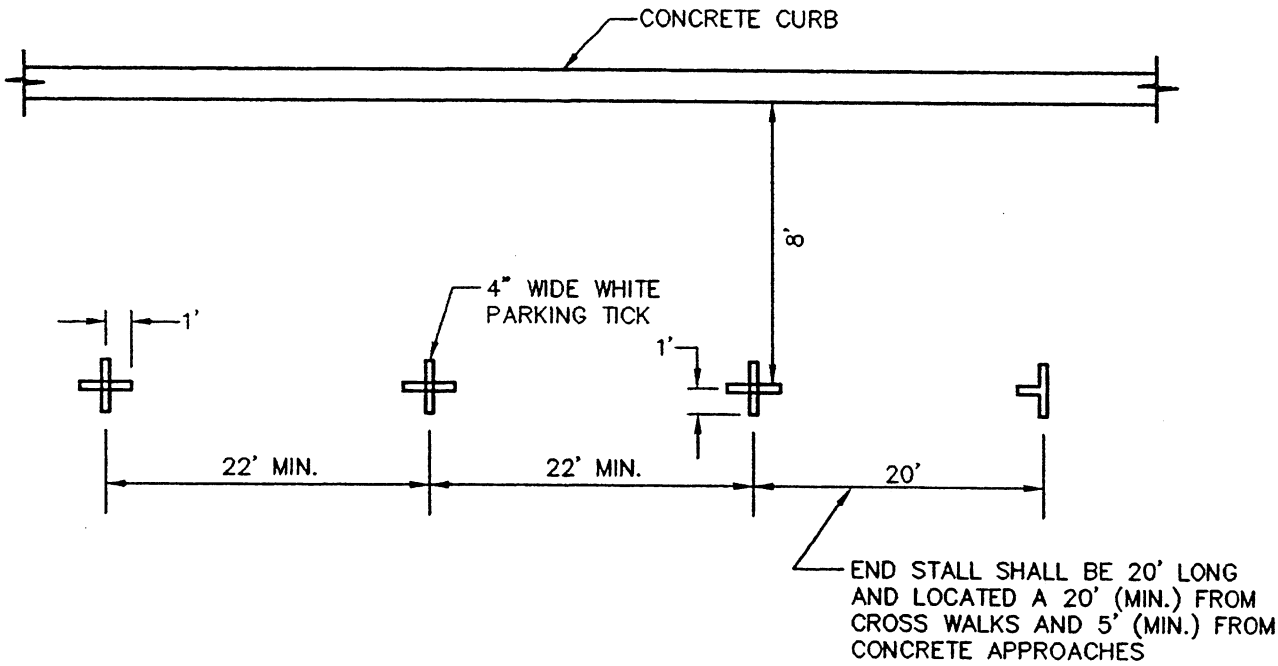

PARALLEL PARKING SPACE MARKING

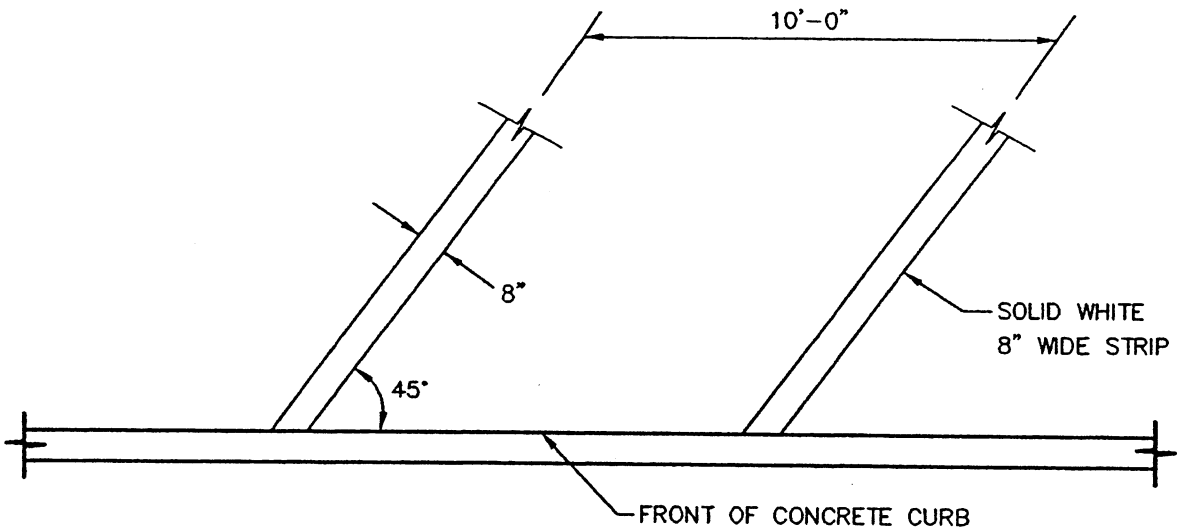

ANGLE PARKING SPACE MARKING

CITY OF LONG BEACH			
PARKING SPACE MARKINGS			
APPROVED: BY CITY / DATE			DWG. NO. CHAN-3
DATE: 8/96	DRWN: J.H.	CHKD: T.J.O.	SCALE: NONE

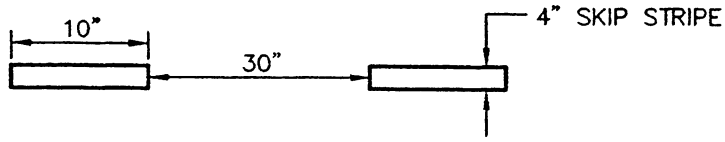

SKIP CENTERLINE STRIPE

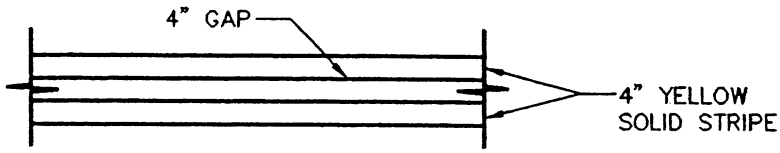

DOUBLE YELLOW CENTERLINE STRIPE

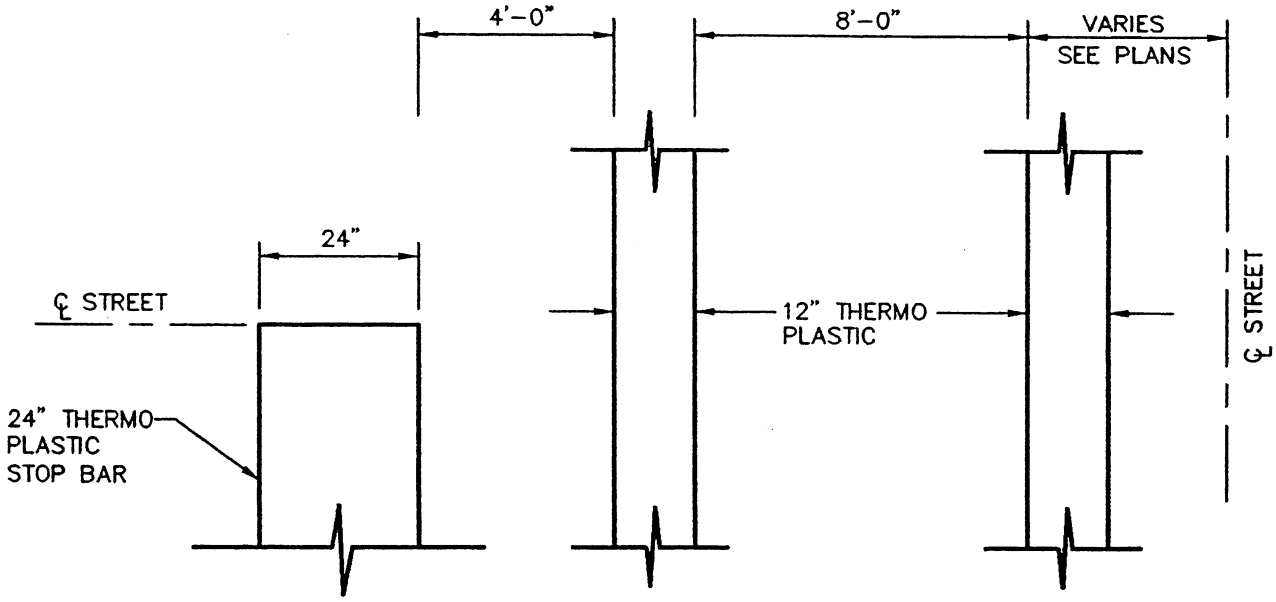

CROSSWALK

PAVEMENT MARKINGS

CITY OF LONG BEACH			
PAVEMENT MARKINGS			
APPROVED: BY CITY / DATE			DWG. NO. CHAN-2
DATE: 8/96	DRWN: J.H.	CHKD: T.J.O.	SCALE: NONE

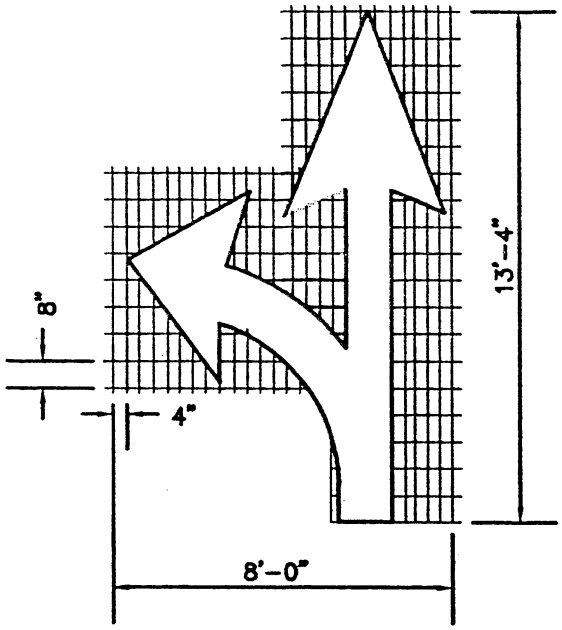

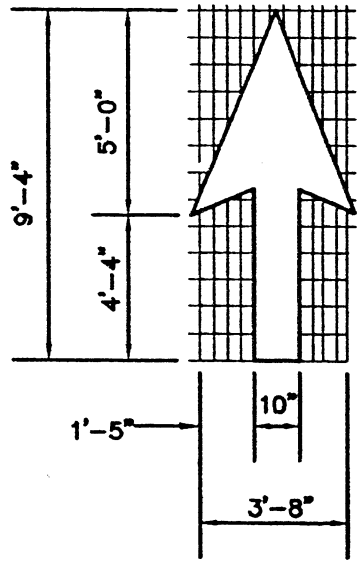

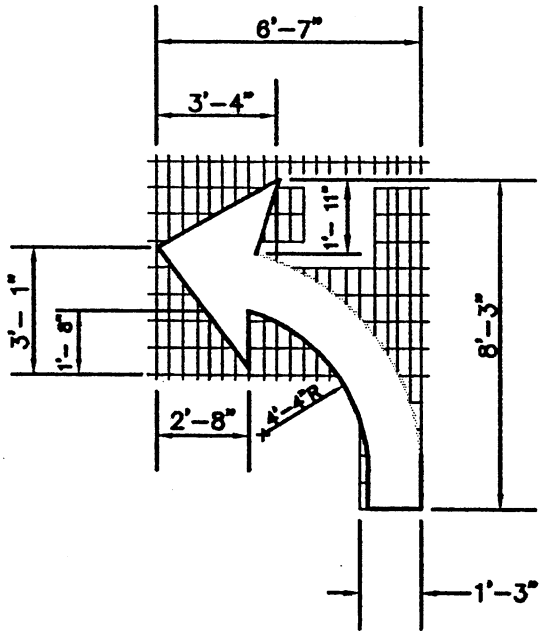

PAVEMENT MARKING ARROWS

NOT TO SCALE

CITY OF LONG BEACH			
TURN ARROW DETAILS			
APPROVED: BY CITY / DATE			DWG. NO. CHAN-1
DATE: 8/96	DRWN: J.H.	CHKD: T.J.O.	SCALE: NONE

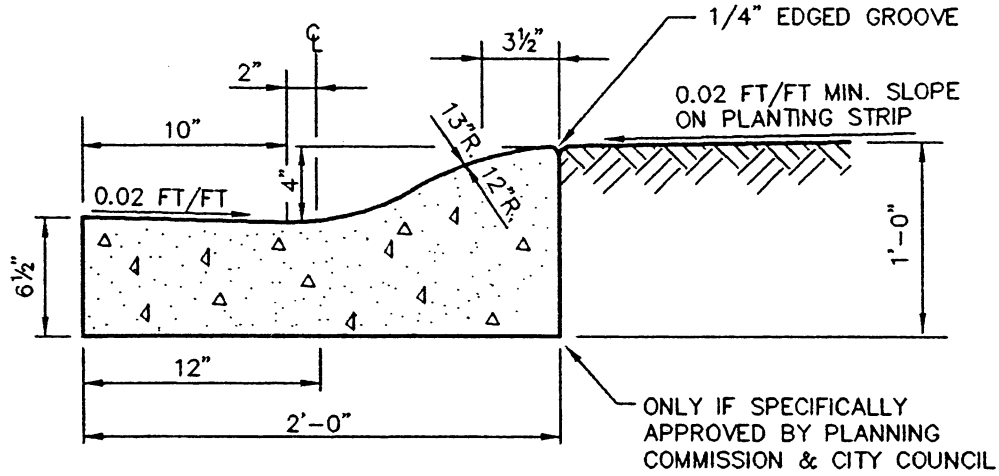

ROLLED CONCRETE CURB AND GUTTER

NOTES:

1. THE CURBS, GUTTERS AND SIDEWALKS SHALL HAVE CONTRACTION JOINTS (3/8" x 1½") AT INTERVALS OF NOT GREATER THAN 15'-0"
2. CEMENT CONCRETE SHALL BE CLASS B

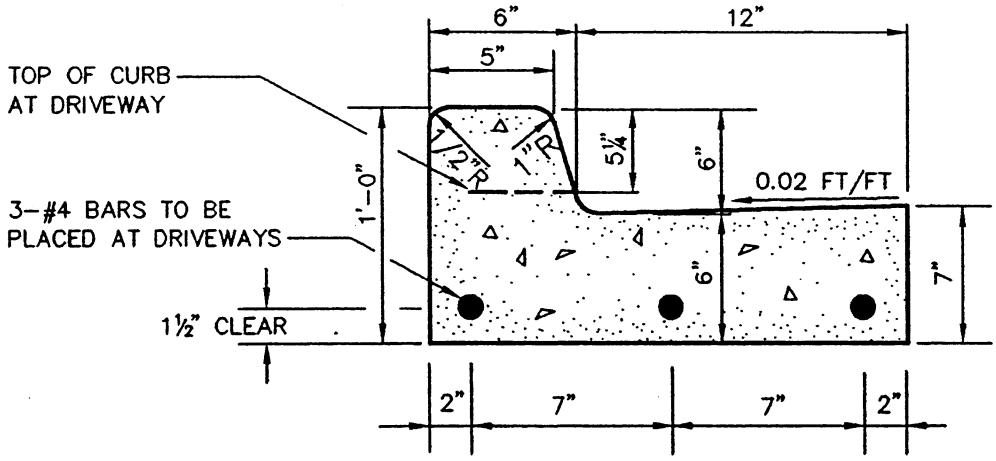

VERTICAL CONCRETE CURB AND GUTTER

CITY OF LONG BEACH			
CONCRETE CURB AND GUTTER			
APPROVED: BY CITY / DATE			DWG. NO. CG-1
DATE: 8/96	DRWN: J.H.	CHKD: T.J.O.	SCALE: NONE

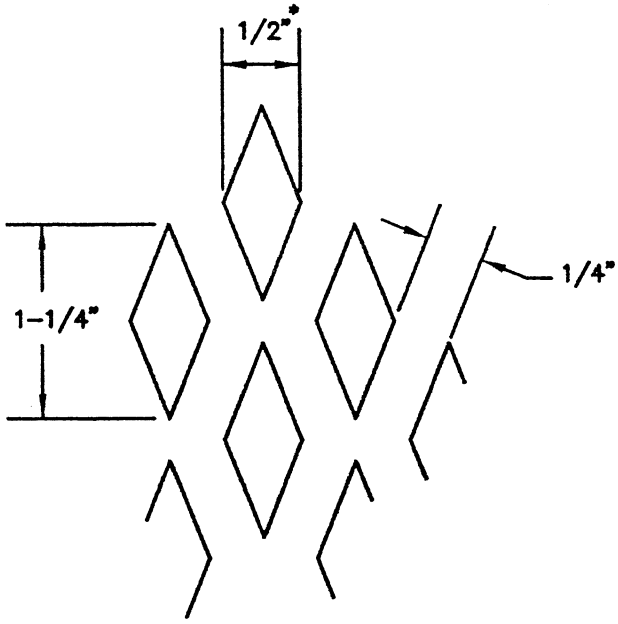

* NOMINAL DIMENSIONS

NOTE:

1. RAMP TEXTURING SHALL BE DONE WITH AN EXPANDED METAL GRATE PLACED AND REMOVED FROM WET CONCRETE TO PRODUCE A DIAMOND PATTERN AS SHOWN. THE LONG AXIS OF THE DIAMOND PATTERN SHALL BE PERPENDICULAR TO THE CURB. GROVES SHALL BE 1/8" DEEP AND 1/4" WIDE.
2. CURB RAMPS SHALL NOT BE POURED INTERGRAL WITH SIDEWALK AND SHALL BE ISOLATED BY EXPANSION JOINT MATERIAL ON ALL SIDES, BUT NOT AT THE END OF RAMP ADJACENT TO THE ROADWAY.
3. "V" GROVES SHALL BE SHAPED TO CORRESPOND TO THE MARKINGS IN EXISTING SIDEWALKS.
4. ALL UTILITY POLES, METER BOXES AND OTHER OBSTRUCTIONS SHALL HAVE 3/8" EXPANSION JOINT MATERIAL PLACED AROUND THEM.
5. ALL SIDEWALK EDGES SHALL HAVE A 1/4" RADIUS.

RAMP TEXTURE DETAIL

CITY OF LONG BEACH			
RAMP TEXTURE DETAIL			
APPROVED: BY CITY / DATE			DWG. NO. SW-2
DATE: 8/96	DRWN: J.H.	CHKD: T.J.O.	SCALE: NONE

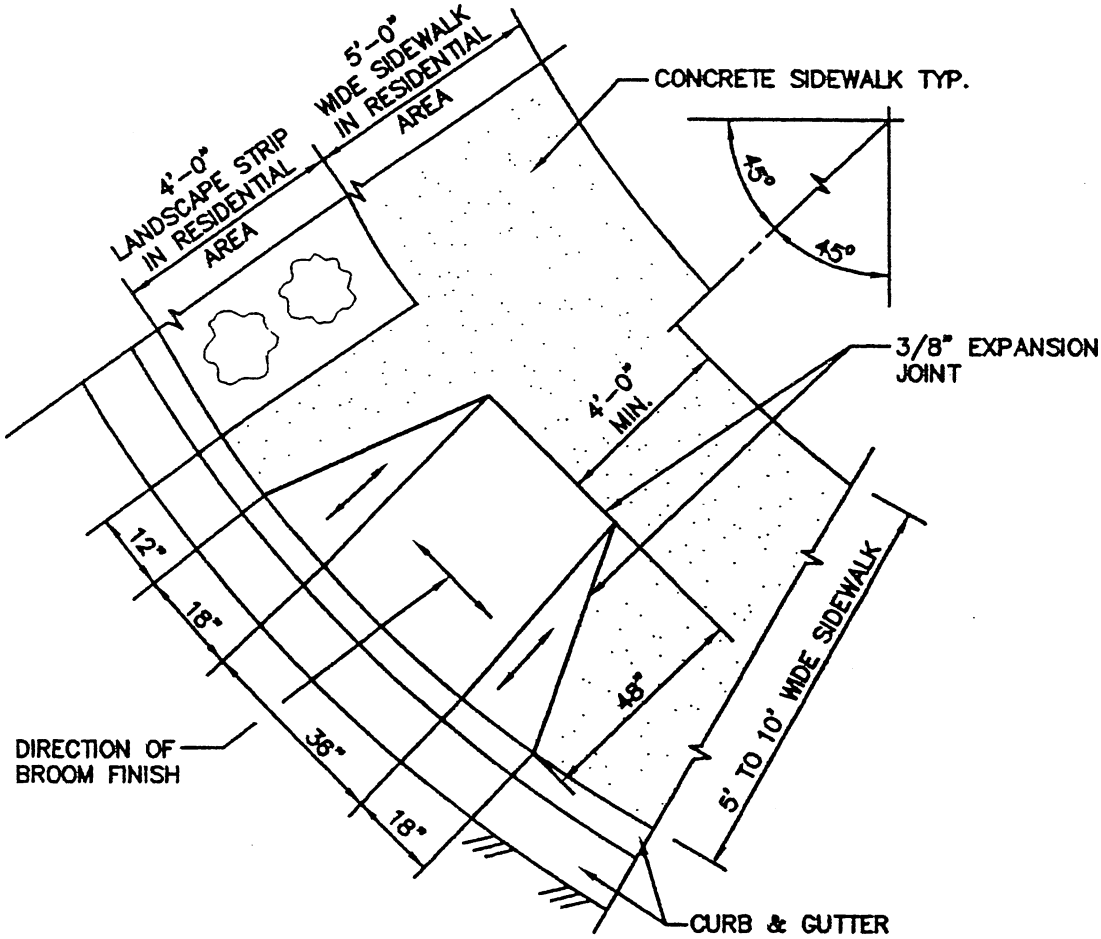

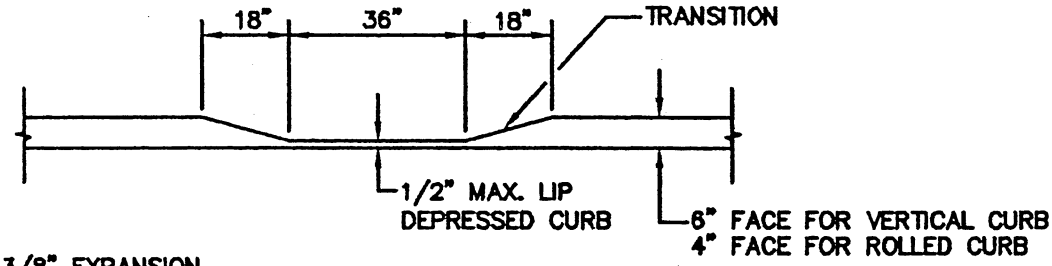

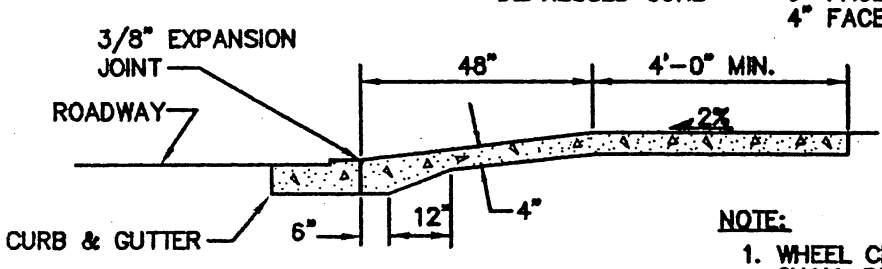

NOTE:

1. WHEEL CHAIR RAMPS SHALL BE PROVIDED AT ALL INTERSECTIONS

WHEEL CHAIR RAMP

CITY OF LONG BEACH			
WHEEL CHAIR RAMP			
APPROVED: BY CITY / DATE			DWG. NO. SW-3
DATE: 8/96	DRWN: J.H.	CHKD: T.J.O.	SCALE: NONE

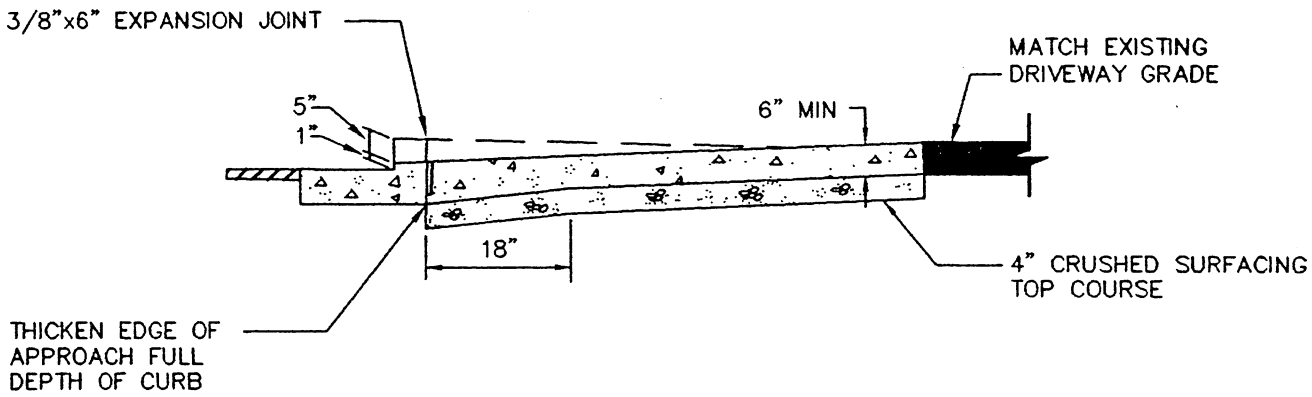

SECTION A–A

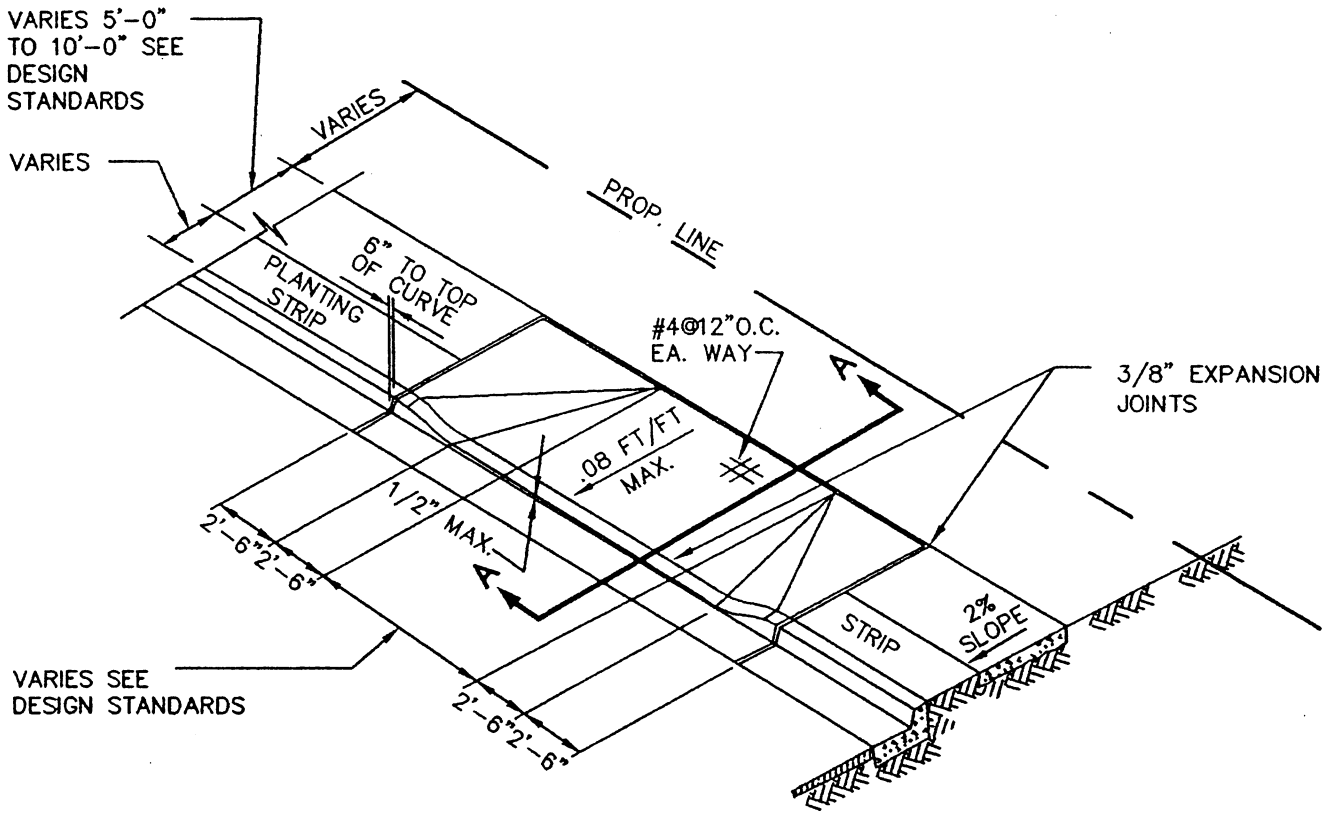

CEMENT CONCRETE DRIVEWAY

CITY OF LONG BEACH			
CEMENT CONCRETE DRIVEWAY			
APPROVED: BY CITY / DATE			DWG. NO. DW–1
DATE: 8/96	DRWN: J.H.	CHKD: T.J.O.	SCALE: NONE

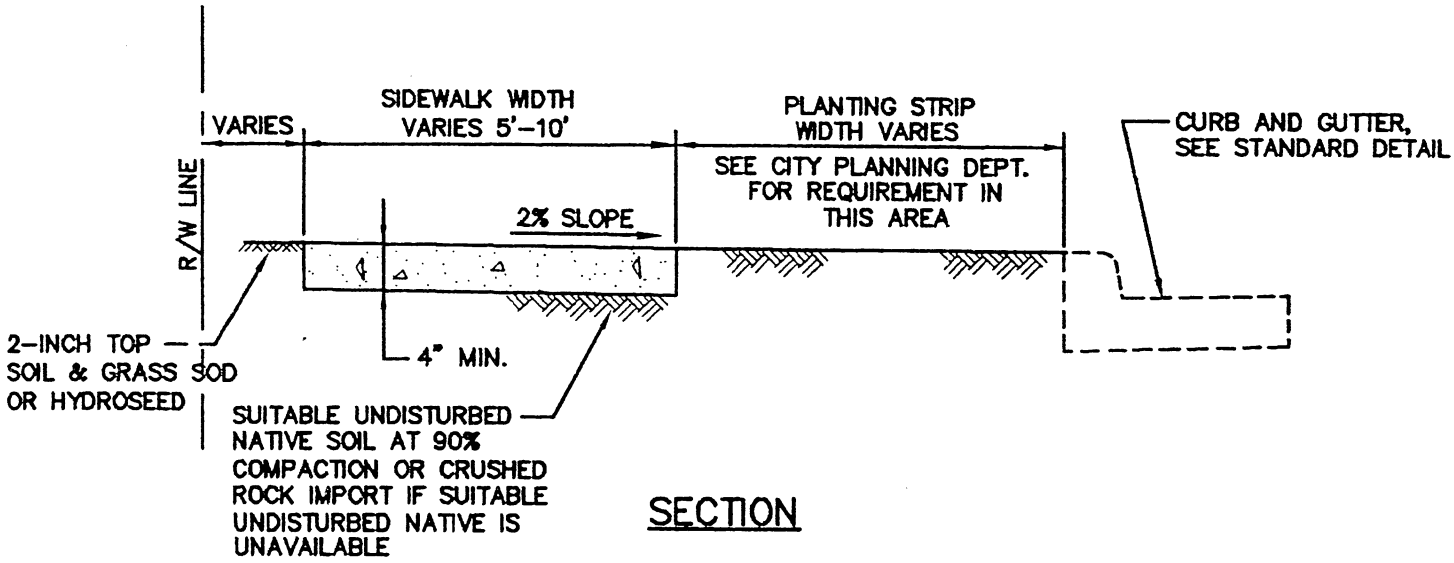

SECTION

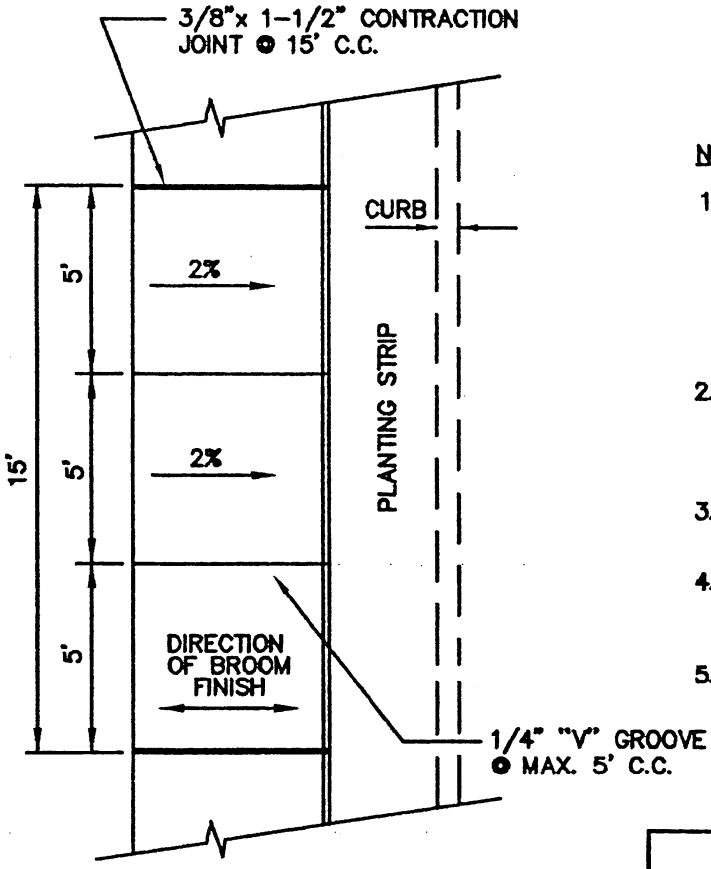

PLAN

SIDEWALK WITH
PLANTING STRIP

MINIMUM SIDEWALK WIDTHS

5' MINIMUM, 10' MAXIMUM
SEE DESIGN STANDARDS

NOTES:

1. JOINTS THRU AND DUMMY JOINTS SHALL BE AS SHOWN ABOVE. THRU JOINTS SHALL ALSO BE PLACED IN THE SIDEWALK SECTION AT DRIVE-WAY AND ALLEY RETURNS. ALL JOINTS SHALL BE CLEAN AND EDGED WITH AN EDGE HAVING 1/4" RADIUS. JOINTS SHALL BE FLUSH WITH THE FINISHED SURFACE.
2. ALL UTILITY POLES, METER BOXES, ETC. IN IN SIDEWALK AREAS SHALL HAVE 3/16" JOINT MATERIAL (FULL DEPTH) PLACED AROUND THEM BEFORE PLACING CONCRETE.
3. PREMOLDED JOINT FILLER SHALL BE 3/16" x 2" ASPHALT SATURATED FELT OR PAPER.
4. FORMS SHALL BE EITHER WOOD OR STEEL AND SHALL MEET ALL REQUIREMENTS OF THESE SPECIFICATIONS.
5. CONCRETE SHALL BE CLASS 3000 PSI

CITY OF LONG BEACH			
SIDEWALK WITH PLANTING STRIP			
APPROVED: BY CITY / DATE			DWG. NO. SW-4
DATE: 8/96	DRWN: J.H.	CHKD: T.J.O.	SCALE: NONE

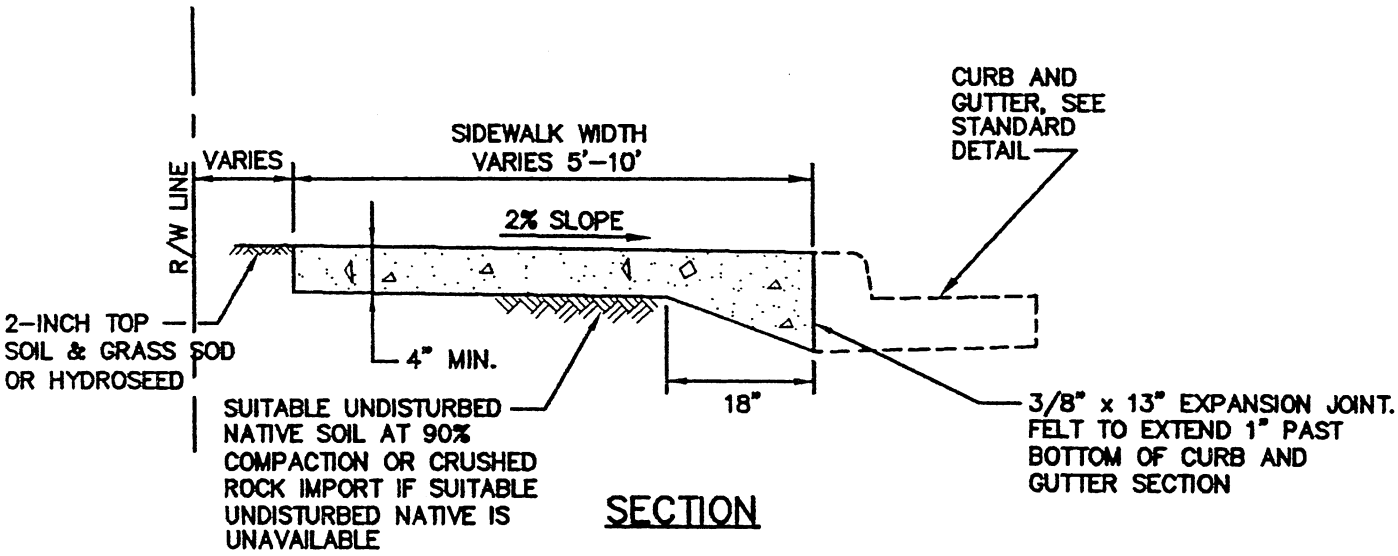

SECTION

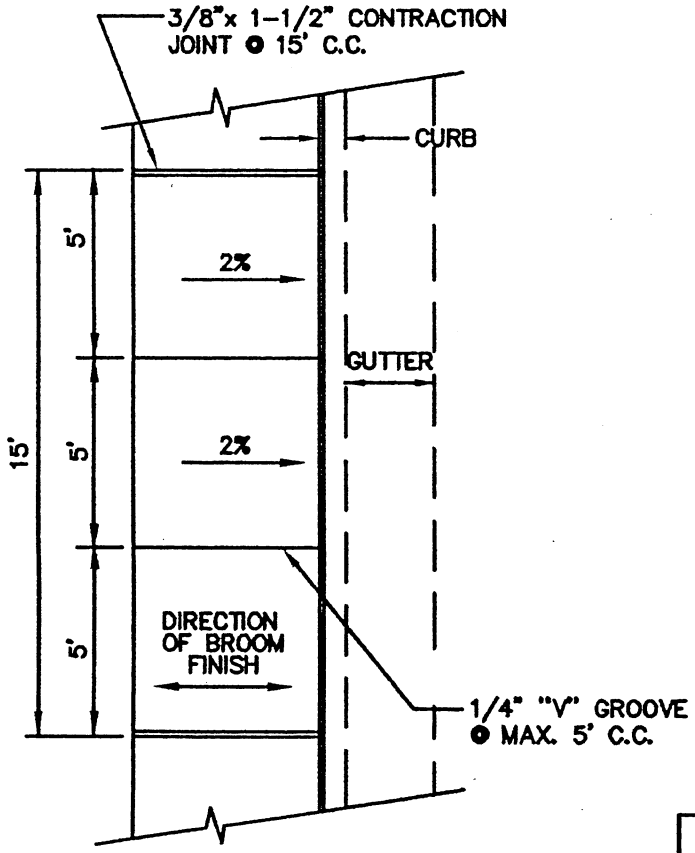

PLAN

SIDEWALK WITHOUT PLANTING STRIP

MINIMUM SIDEWALK WIDTHS

5' MINIMUM, 10' MAXIMUM
SEE DESIGN STANDARDS

NOTES:

1. THRU JOINTS AND CONTRACTION JOINTS SHALL BE AS SHOWN ABOVE. THRU JOINTS SHALL ALSO BE PLACED IN THE SIDEWALK SECTION AT DRIVE-WAY AND ALLEY RETURNS. ALL JOINTS SHALL BE CLEAN AND EDGED WITH AN EDGE HAVING 1/4" RADIUS. JOINTS SHALL BE FLUSH WITH THE FINISHED SURFACE.
2. ALL UTILITY POLES, METER BOXES, ETC. IN IN SIDEWALK AREAS SHALL HAVE 3/8" JOINT MATERIAL (FULL DEPTH) PLACED AROUND THEM BEFORE PLACING CONCRETE.
3. PREMOLDED JOINT FILLER SHALL BE 3/8"x 2" ASPHALT SATURATED FELT OR PAPER.
4. FORMS SHALL BE EITHER WOOD OR STEEL AND SHALL MEET ALL REQUIREMENTS OF THESE SPECIFICATIONS.
5. CONCRETE SHALL BE CLASS 3000 PSI

CITY OF LONG BEACH			
SIDEWALK WITHOUT PLANTING STRIP			
APPROVED: BY CITY / DATE			DWG. NO. SW-1
DATE: 8/96	DRWN: J.H.	CHKD: T.J.O.	SCALE: NONE

STOP OR YEILD CONTROLLED INTERSECTIONS

EXAMPLE: MAJOR STREET SPEED LIMIT = 25 M.P.H.

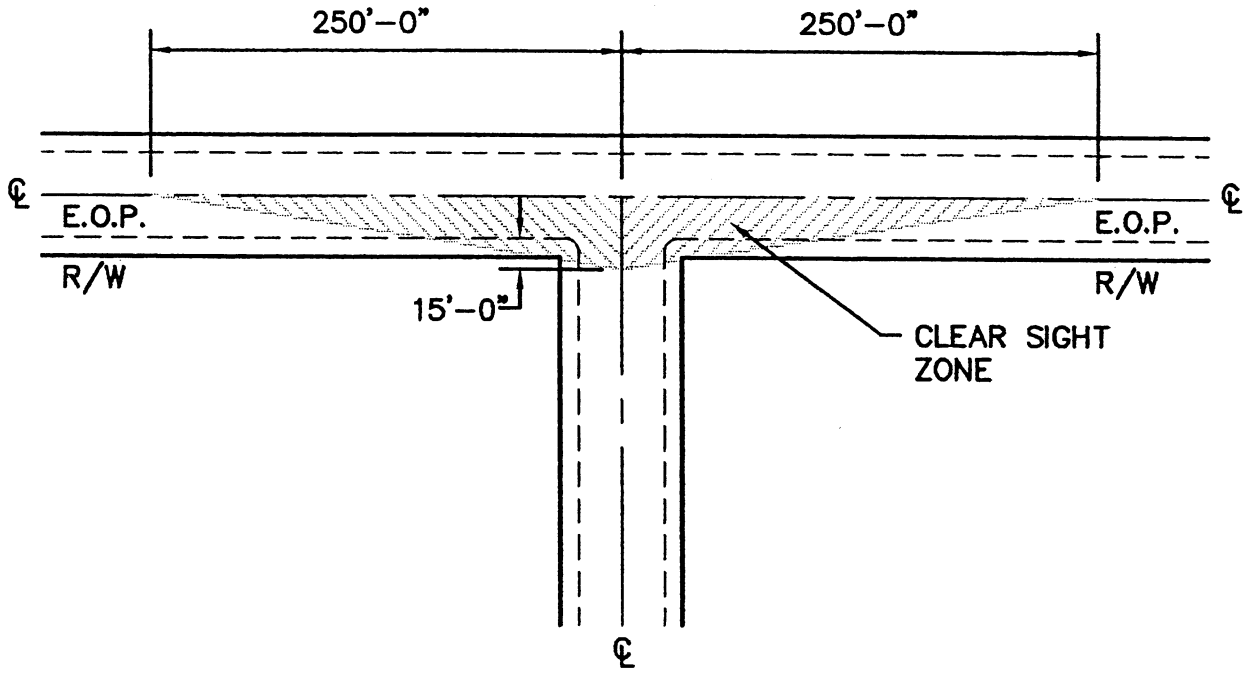

UNCONTROLLED INTERSECTIONS

EXAMPLE: MAJOR STREET SPEED LIMIT = 30 M.P.H.
MINOR STREET SPEED LIMIT = 20 M.P.H.

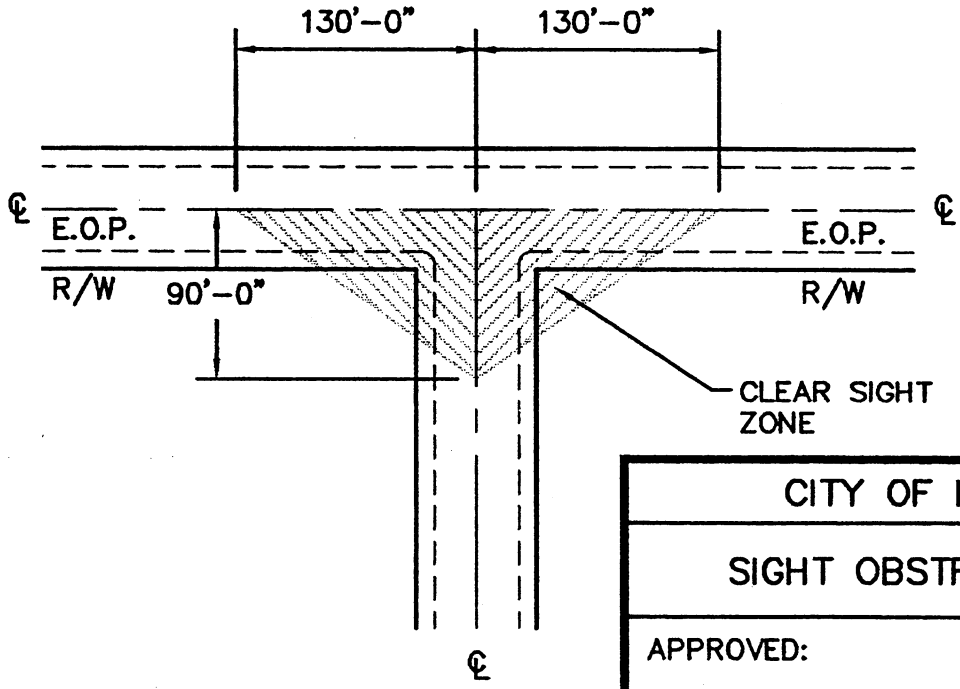

CITY OF LONG BEACH			
SIGHT OBSTRUCTION DETAIL			
APPROVED: BY CITY / DATE			DWG. NO. ST-6
DATE: 8/96	DRWN: J.H.	CHKD: T.J.O.	SCALE: NONE

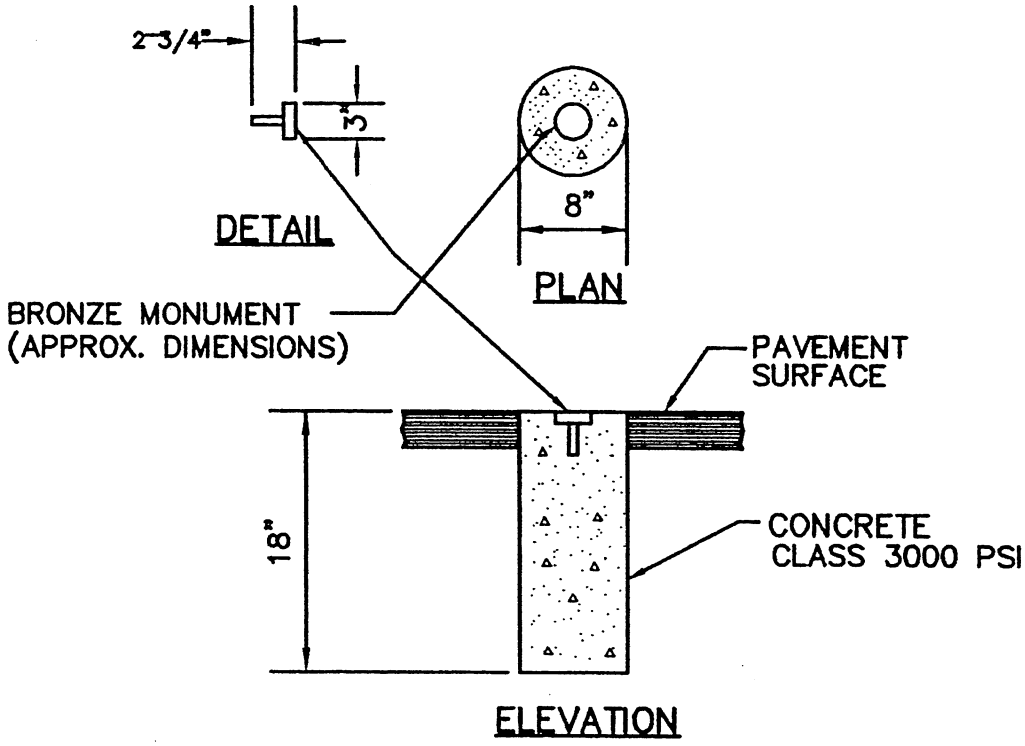

NOTE:

1. THE HOLE FOR THE MONUMENT SHALL BE CUT AFTER THE NEW PAVEMENT HAS BEEN CONSTRUCTED. THE UPPER 3" OF THE MONUMENT ENCASEMENT SHALL BE SHAPED TO A TRUE DIAMETER OF 8-INCH. CLASS "C" CONCRETE SHALL BE USED FOR ENCASEMENT. THE BRONZE MONUMENT WILL BE SET SIMULTANEOUSLY WITH THE POURING OF CONCRETE IN THE ENCASEMENT.
2. SURFACE MONUMENT WILL GENERALLY NOT BE ACCEPTED BUT WILL BE EVALUATED, UPON REQUEST, ON A CASE BY CASE BASIS.

CITY OF LONG BEACH			
SURFACE MONUMENT			
APPROVED: BY CITY DATE			DWG. NO. ST-8
DATE: 8/96	DRWN: J.H.	CHKD: T.J.O.	SCALE: NONE

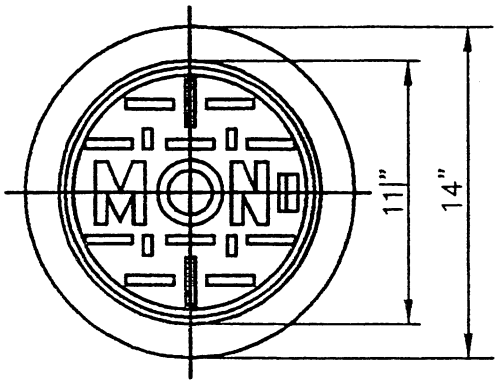

MONUMENT COVER

NOTES:

1. MACHINE BEARING FACES OF COVER AND CASE TO INSURE POSITIVE FIT.
2. MATERIAL SHALL CONFORM TO THE "1994 STANDARD SPECIFICATIONS FOR ROAD, BRIDGE AND MUNICIPAL CONSTRUCTION" PREPARED BY THE WASHINGTON STATE DEPT. OF TRANSPORTATION AND AMERICAN PUBLIC WORKS ASSOCIATION, WASHINGTON STATE CHAPTER.

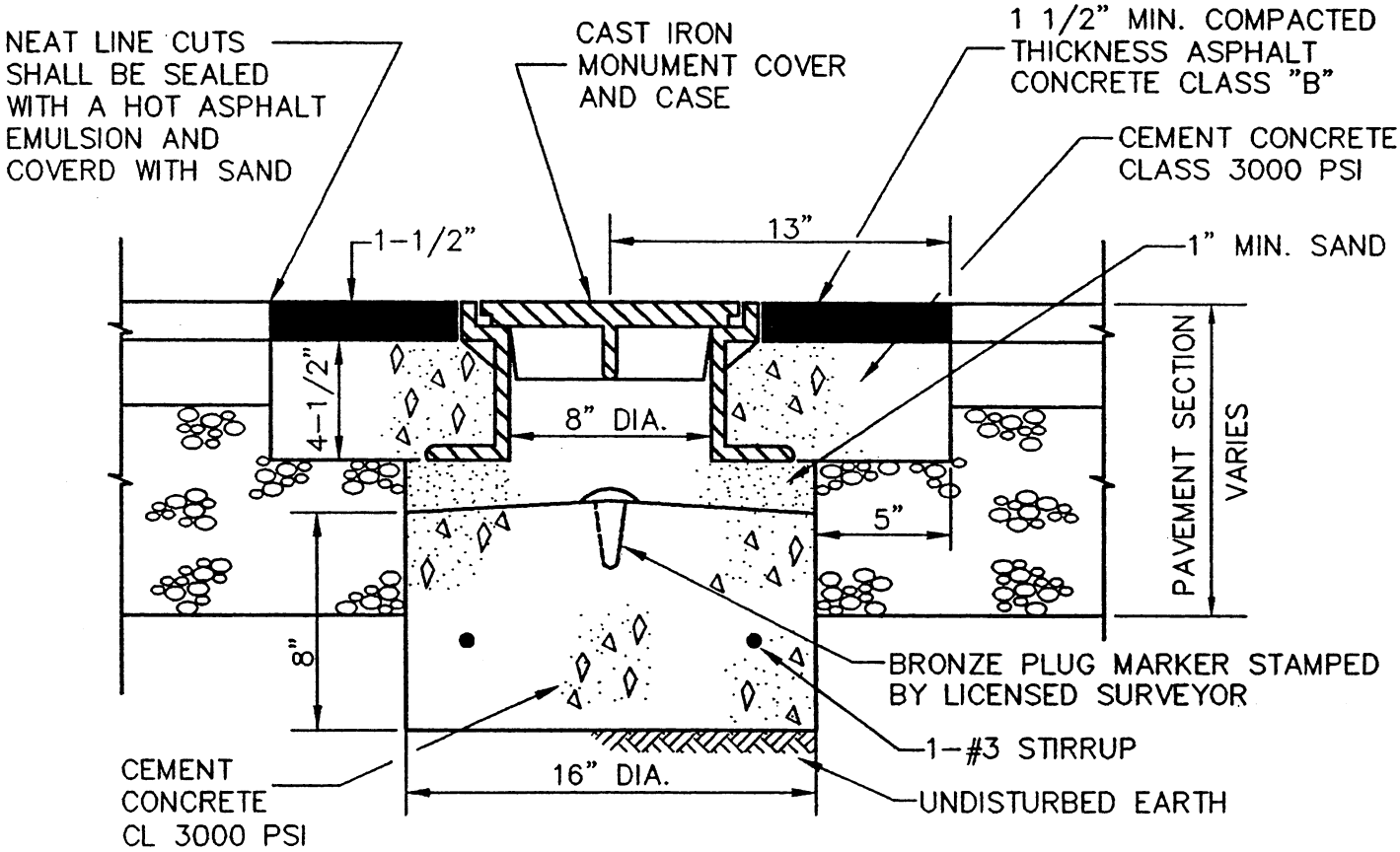

POURED MONUMENT IN PLACE

CITY OF LONG BEACH			
POURED MONUMENT IN PLACE			
APPROVED: BY CITY / DATE			DWG. NO. MON-1
DATE: 8/96	DRWN: J.H.	CHKD: T.J.O.	SCALE: NONE

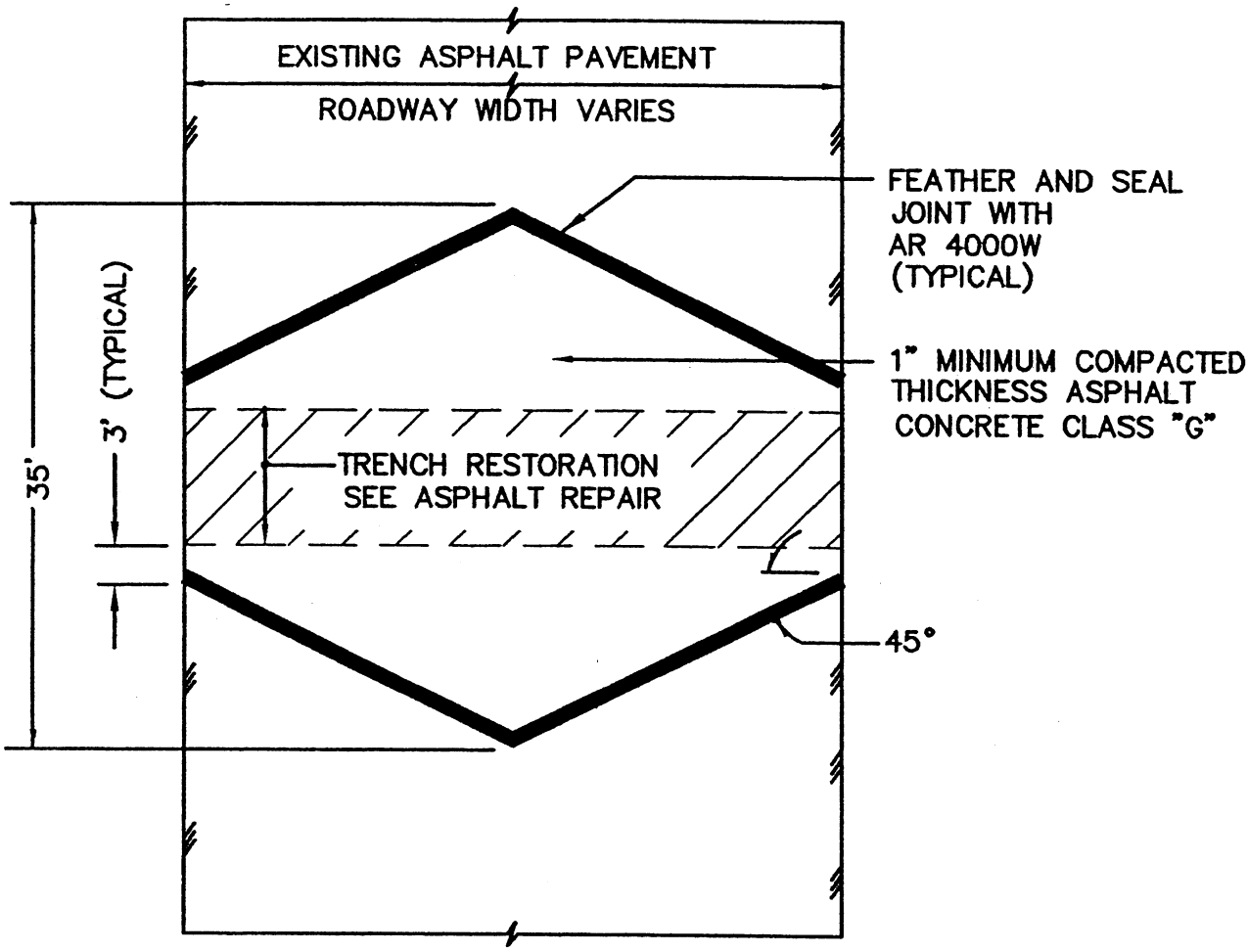

CITY OF LONG BEACH			
ASPHALT DIAMOND PATCH			
APPROVED: BY CITY / DATE			DWG. NO. 21
DATE: 8/96	DRWN: J.H.	CHKD: T.J.O.	SCALE: NONE

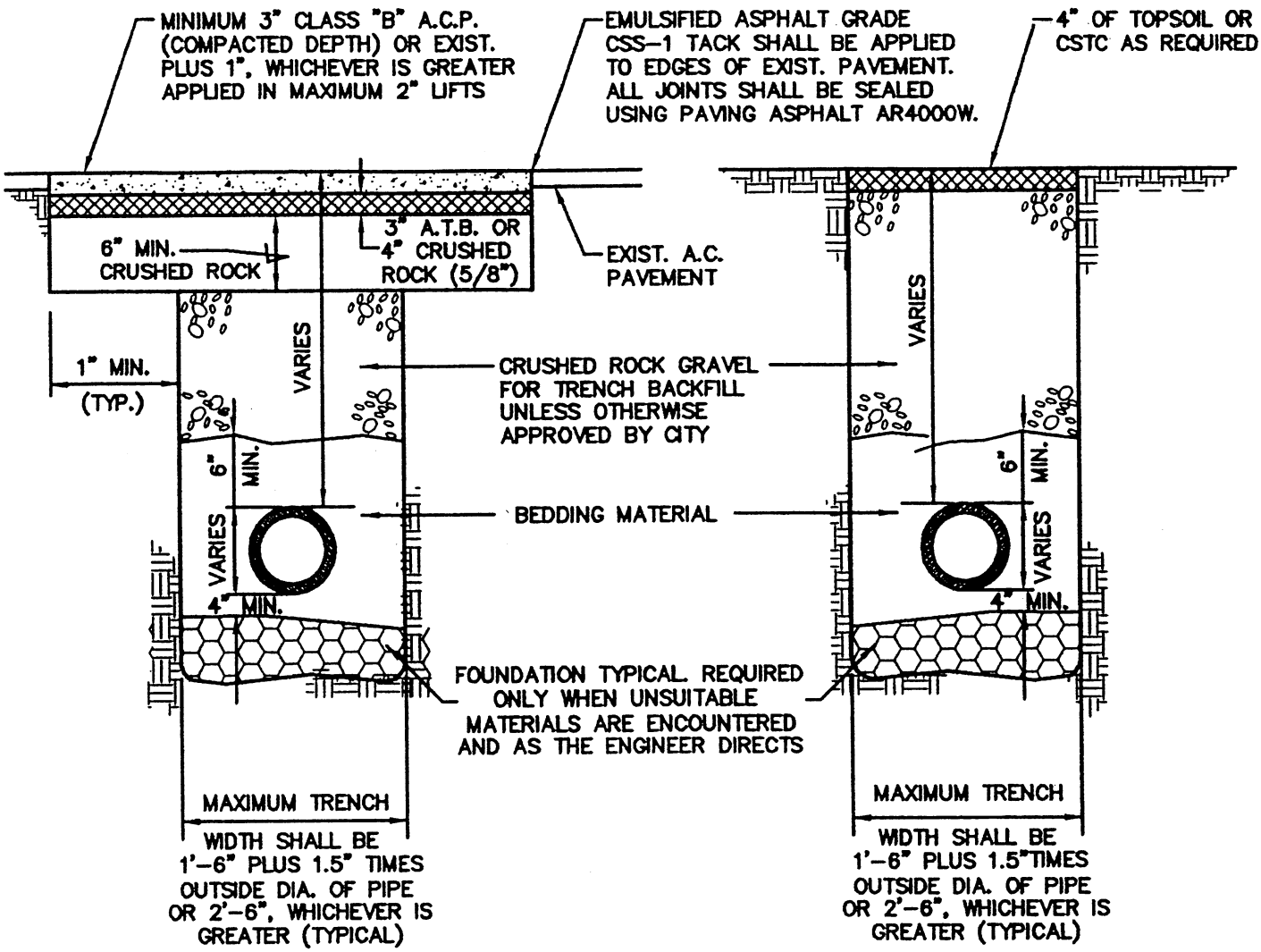

NOTES:

1. ALL MATERIALS EXCEPT A.C.P. AND BEDDING MATERIAL SHALL BE COMPACTED IN 6-INCH MAXIMUM LIFTS TO 95% DENSITY.
2. BEDDING SHALL CONFORM TO CITY STANDARDS OF STANDARD SPECIFICATIONS.
3. COMPACTION: BEDDING SHALL BE COMPACTED TO 95% MAX. AS DETERMINED BY ASTM D1557. BACKFILL SHALL BE COMPACTED TO 85% IN UNPAVED AREA, AND 95% IN PAVED OR SHOULDER AREAS AS DETERMINED BY ASTM D1557.
4. ALL MATERIALS, WORKMANSHIP, AND INSTALLATION SHALL BE IN CONFORMANCE WITH THE STANDARD SPECIFICATIONS FOR ROAD, BRIDGE AND MUNICIPAL CONSTRUCTION AS AMENDED BY CITY STANDARDS.
5. KEEP TRENCH BOTTOM COMPACTED WITH UNIFORM GRADE. A BELL JOINT SHALL BE REQUIRED AT EACH JOINT FOR PROPER SUPPORT. NO TEMPORARY SUPPORTS, I.E. BLOCKS, WILL BE ALLOWED TO SUPPORT PIPE. TRENCH BOTTOM SHALL BE TO GRADE PRIOR TO PIPE INSTALLATION.

CITY OF LONG BEACH			
TRENCH – PAVEMENT RESTORATION			
APPROVED: BY CITY / DATE			DWG. NO. ST-5
DATE: 8/96	DRWN: J.H.	CHKD: T.J.O.	SCALE: NONE

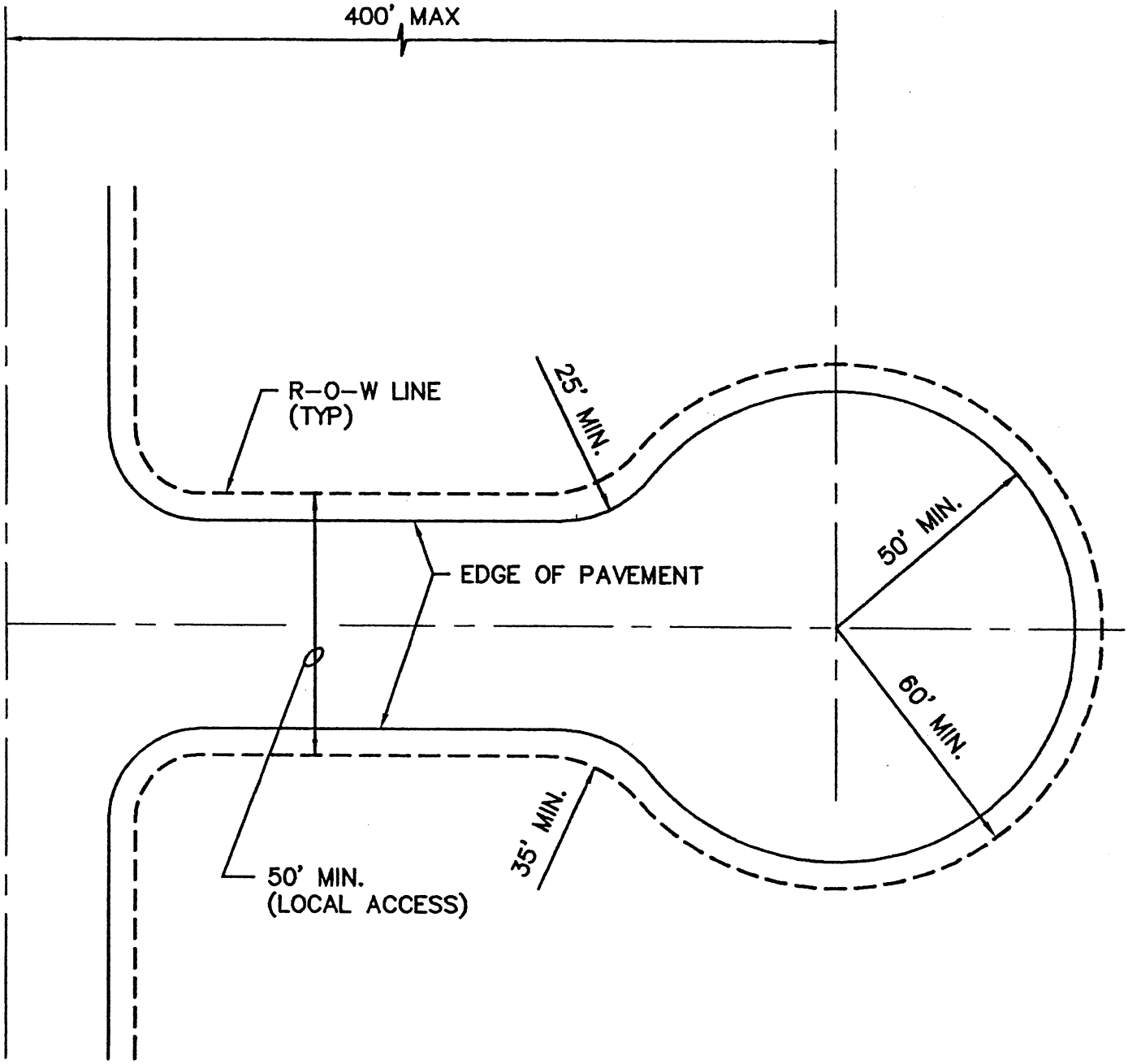

CITY OF LONG BEACH			
LAYOUT OF CUL-DE-SAC			
APPROVED: BY CITY / DATE			DWG. NO. ST-10
DATE: 5/98	DRWN: M.S.J.	CHKD: T.J.O.	SCALE: NONE

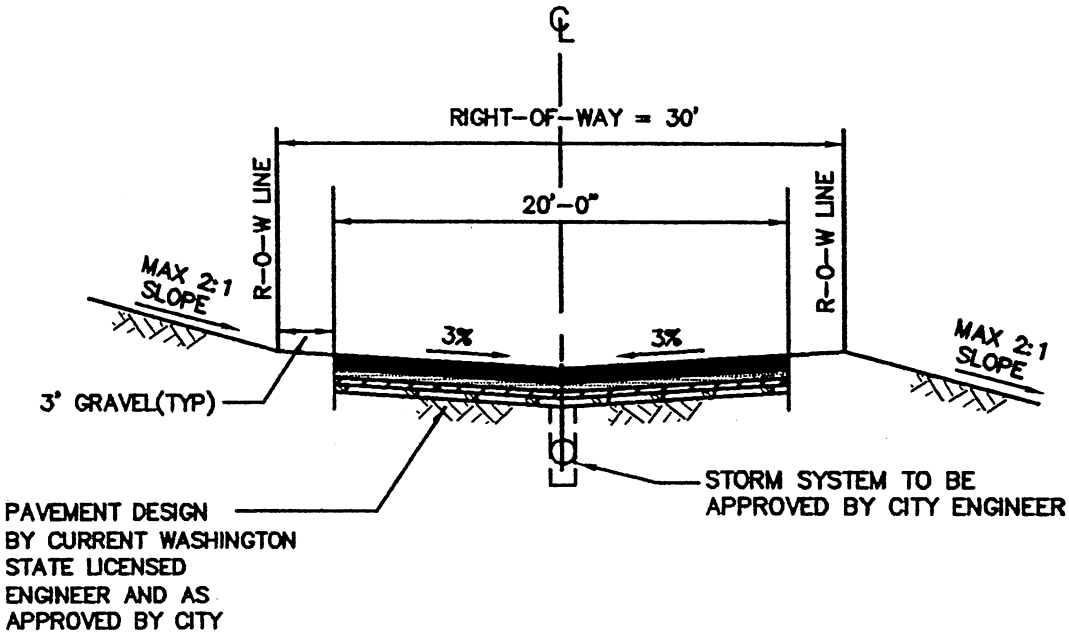

CITY OF LONG BEACH			
ALLEY SECTION/PRIVATE ROAD			
APPROVED: BY CITY / DATE			DWG. NO. ST-4
DATE: 8/96	DRWN: J.H.	CHKD: T.J.O.	SCALE: NONE

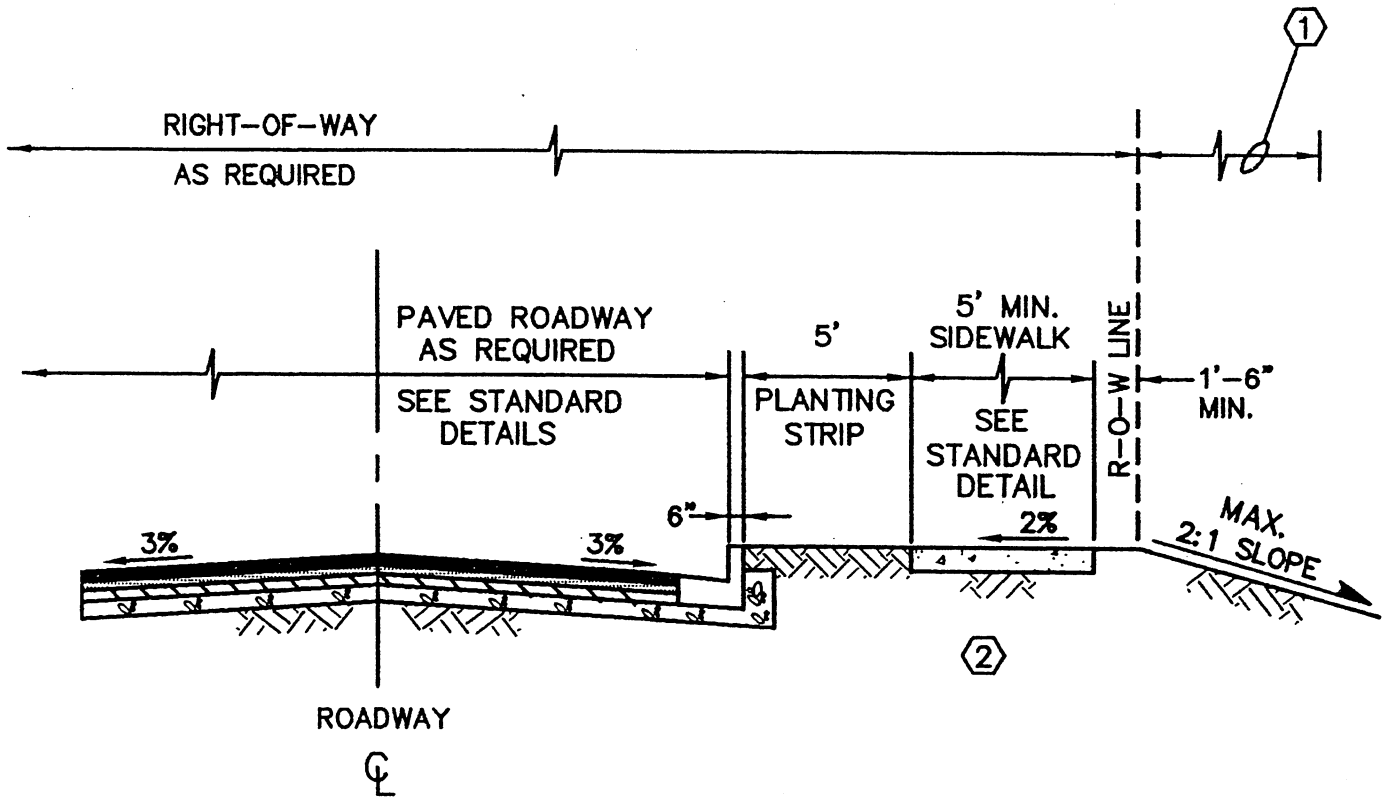

NOTE

(1) 10' ROAD AND/OR UTILITY EASEMENT REQUIRED (BOTH SIDES)

(2) PLANTER AND SIDEWALK MAYBE REQUIRED ON BOTH SIDES OF ROADWAY.

CITY OF LONG BEACH			
LAYOUT OF PLANTER STRIP			
APPROVED: BY CITY / DATE			DWG. NO. ST-9
DATE: 5/98	DRWN: M.S.J.	CHKD: T.J.O.	SCALE: NONE

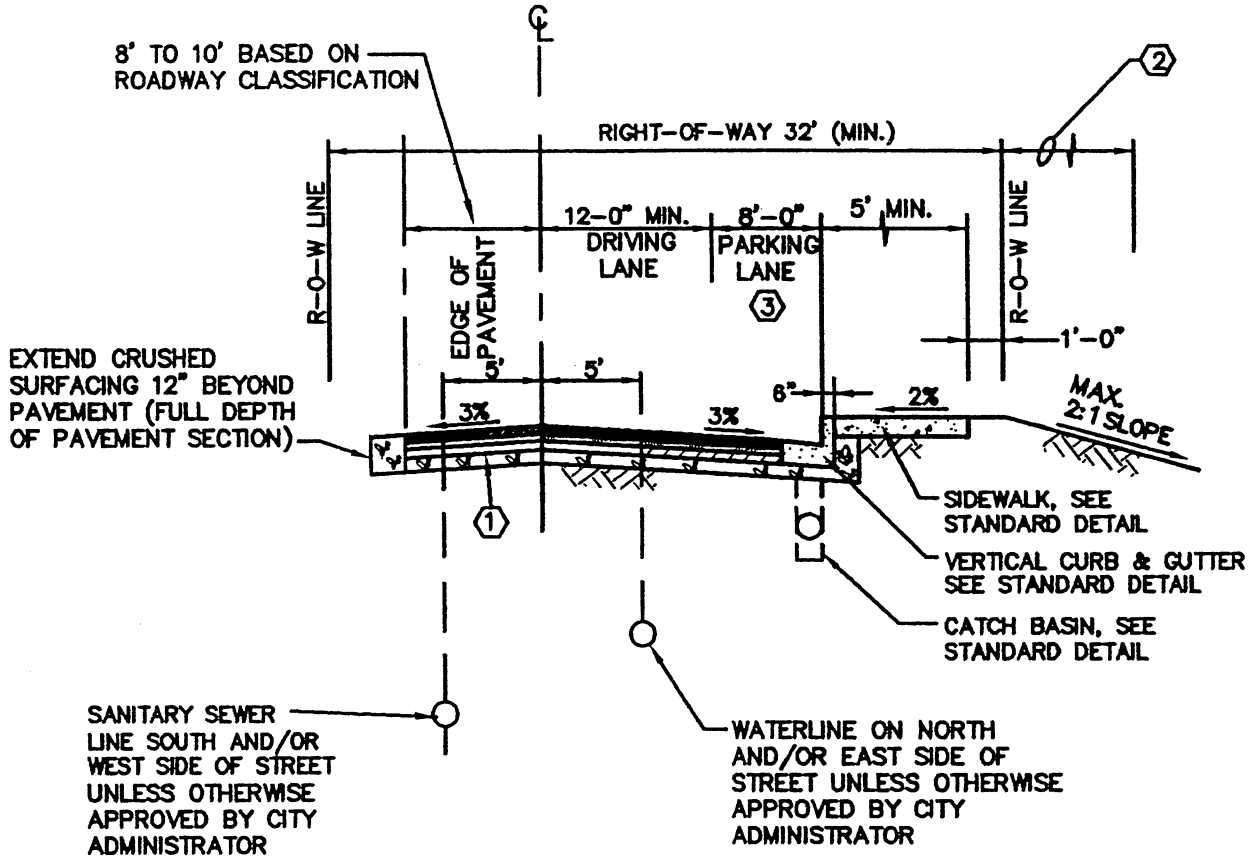

NOTE

1. PAVEMENT DESIGN BY CURRENT WASHINGTON STATE LICENSED CIVIL ENGINEER AND AS APPROVED BY THE CITY ENGINEER.

2. 5' ROAD AND/OR UTILITY EASEMENT REQUIRED (BOTH SIDES)

3. CITY TO DETERMINE WHICH SIDE OF STREET TO INSTALL PARKING STRIP.

4. PARKING SHALL BE ALLOWED ONLY ON ONE SIDE OF THE ROADWAY. APPROPRIATELY LOCATED "NO PARKING" SIGNAGE SHALL BE PROVIDED AS DIRECTED BY THE CITY.

CITY OF LONG BEACH			
HALF-STREET SECTION			
APPROVED: BY CITY ____ DATE ____			DWG. NO. ST-2D
DATE: 8/96	DRWN: J.H.	CHKD: T.J.O.	SCALE: NONE

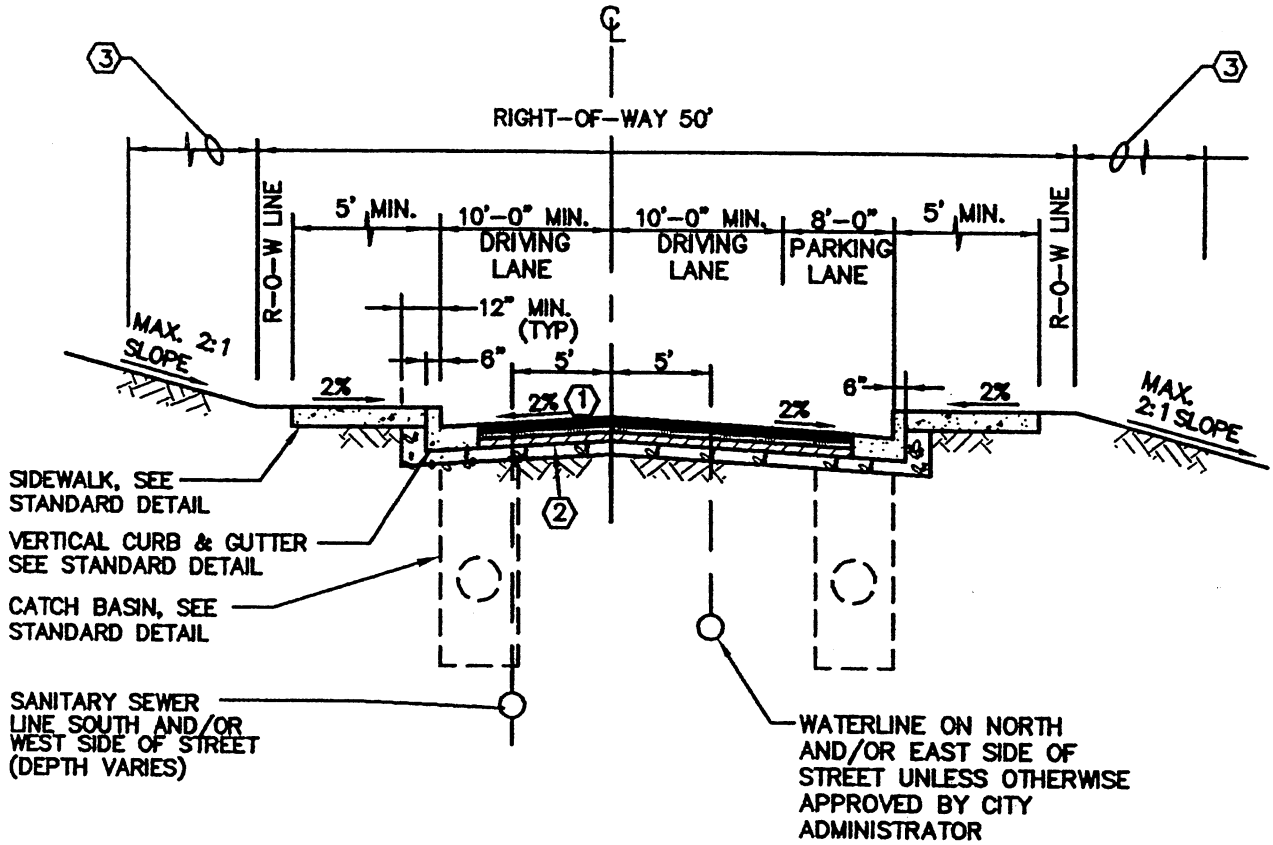

NOTE

① IF ROAD PROFILE GRADE IS LESS THAN .7%, THEN CROSS SLOPE SHALL BE 3%

② PAVEMENT DESIGN BY CURRENT WASHINGTON STATE LICENSED CIVIL ENGINEER AND AS APPROVED BY THE CITY ENGINEER.

③ 5' ROAD AND/OR UTILITY EASEMETN REQUIRED (BOTH SIDES)

④ CITY TO DETERMINE WHICH SIDE OF STREEL TO INSTALL PARKING STRIP.

CITY OF LONG BEACH			
LOCAL ACCESS STREET SECTION			
APPROVED: BY CITY / DATE			DWG. NO. ST-2C
DATE: 8/96	DRWN: J.H.	CHKD: T.J.O.	SCALE: NONE

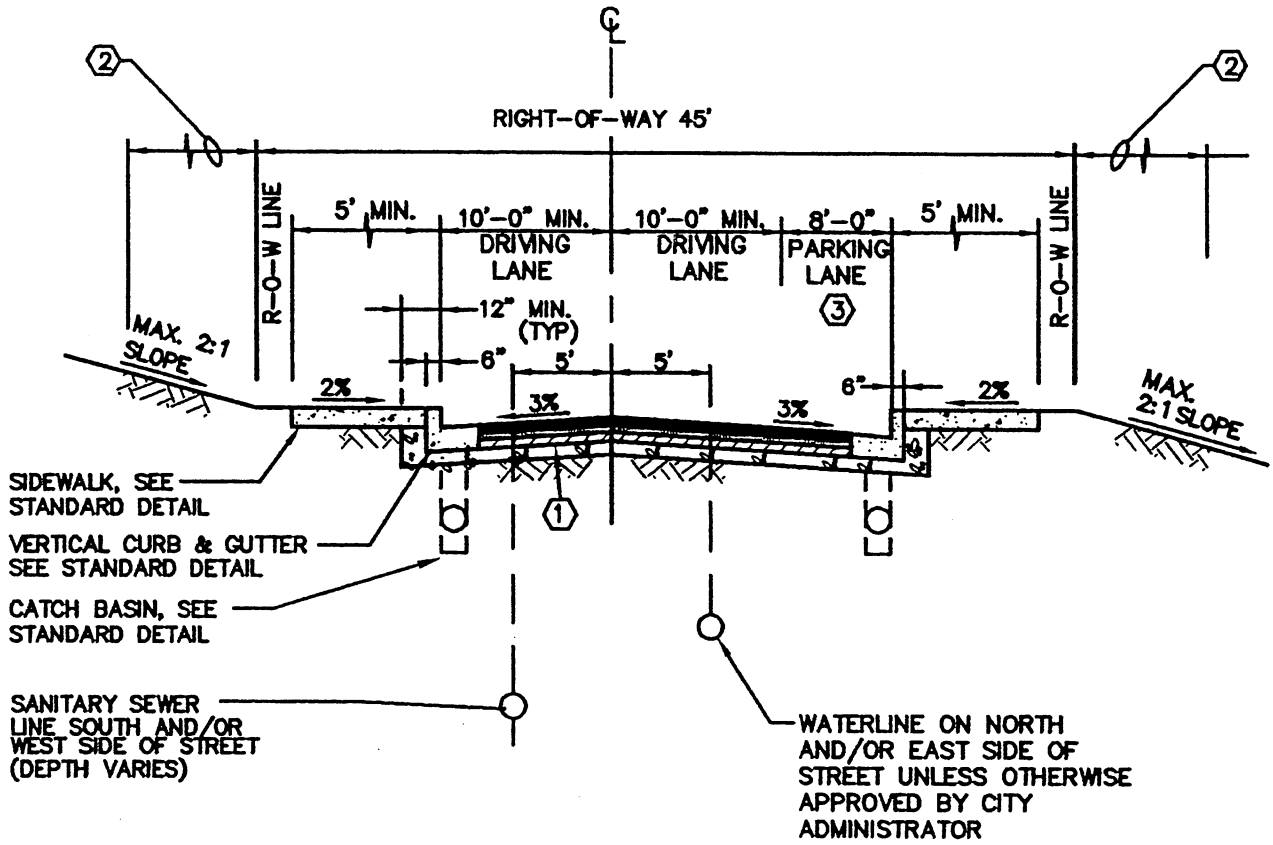

NOTE

(1) PAVEMENT DESIGN BY CURRENT WASHINGTON STATE LICENSED CIVIL ENGINEER AND AS APPROVED BY THE CITY ENGINEER.

(2) 5' ROAD AND/OR UTILITY EASEMENT REQUIRED (BOTH SIDES)

(3) CITY TO DETERMINE WHICH SIDE OF STREEL TO INSTALL PARKING STRIP.

CITY OF LONG BEACH			
MINOR ACCESS STREET SECTION			
APPROVED: BY CITY ____ DATE ____			DWG. NO. ST-2B
DATE: 8/96	DRWN: J.H.	CHKD: T.J.O.	SCALE: NONE

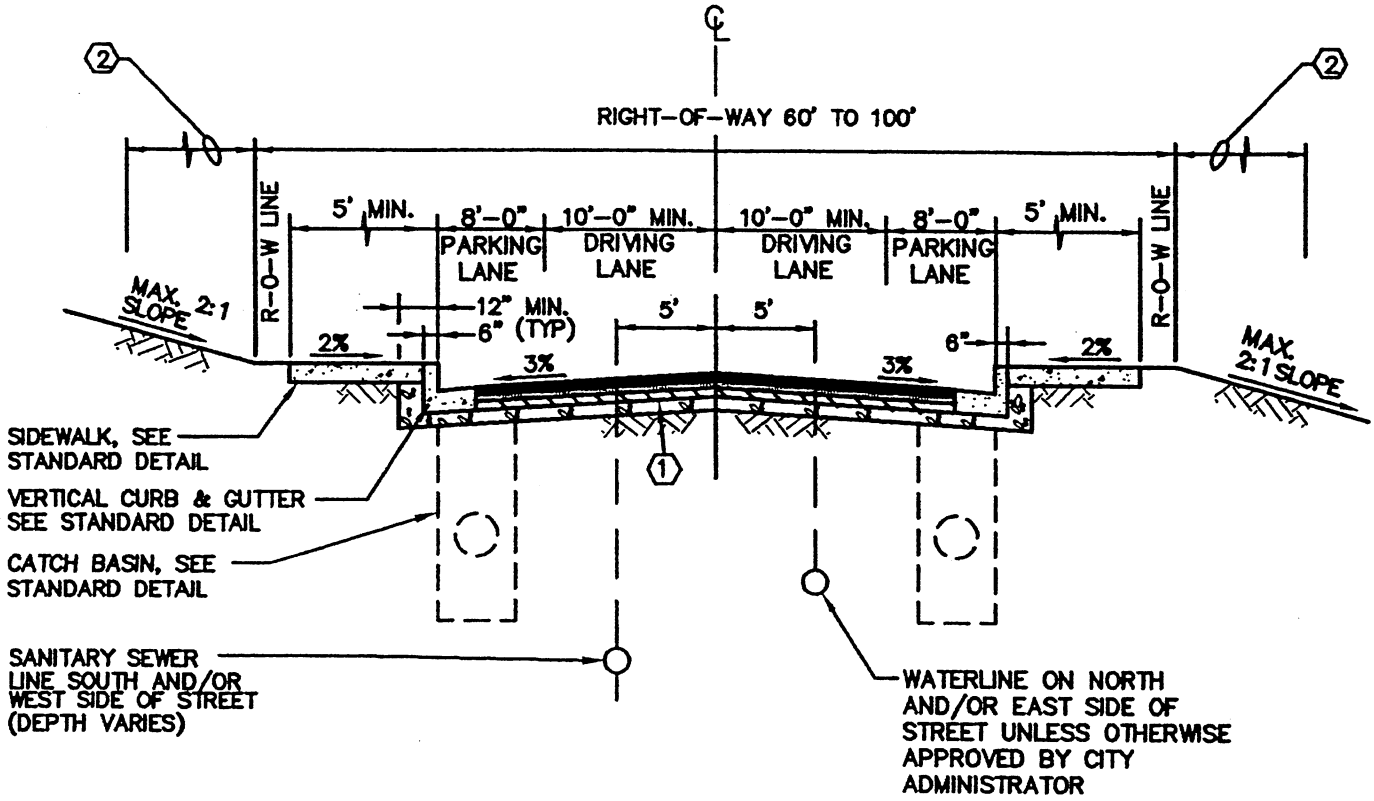

NOTE

(1) PAVEMENT DESIGN BY CURRENT WASHINGTON STATE LICENSED CIVIL ENGINEER AND AS APPROVED BY THE CITY ENGINEER.

(2) 5' ROAD AND/OR UTILITY EASEMENT REQUIRED (BOTH SIDES)

CITY OF LONG BEACH			
COLLECTOR STREET SECTION			
APPROVED: BY CITY ____ DATE ____			DWG. NO. ST-2A
DATE: 8/96	DRWN: J.H.	CHKD: T.J.O.	SCALE: NONE

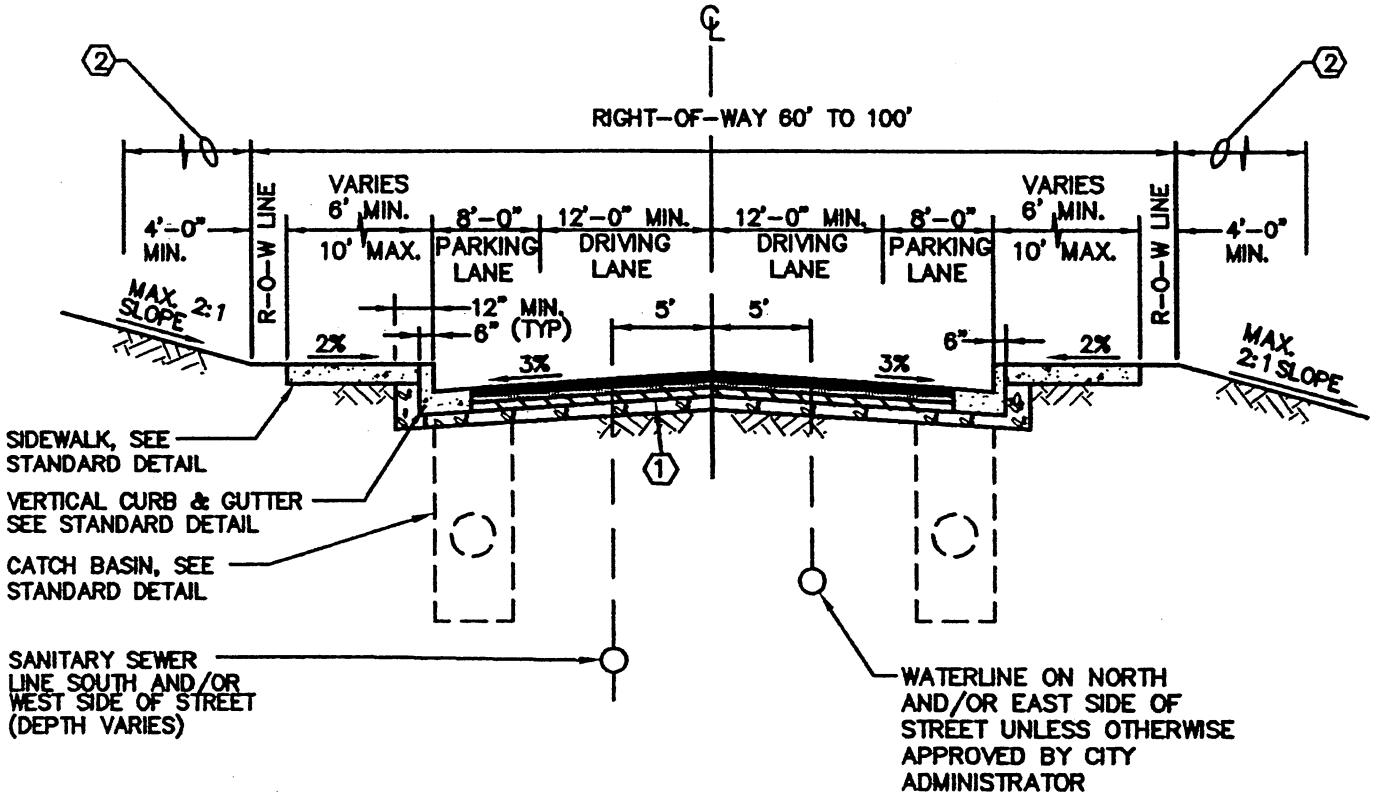

NOTE

(1) PAVEMENT DESIGN BY CURRENT WASHINGTON STATE LICENSED CIVIL ENGINEER AND AS APPROVED BY THE CITY ENGINEER.

(2) 10' ROAD AND/OR UTILITY EASEMENT REQUIRED (BOTH SIDES)

CITY OF LONG BEACH			
MINOR ARTERIAL STREET SECTION			
APPROVED: BY CITY / DATE			DWG. NO. ST-2
DATE: 8/96	DRWN: J.H.	CHKD: T.J.O.	SCALE: NONE

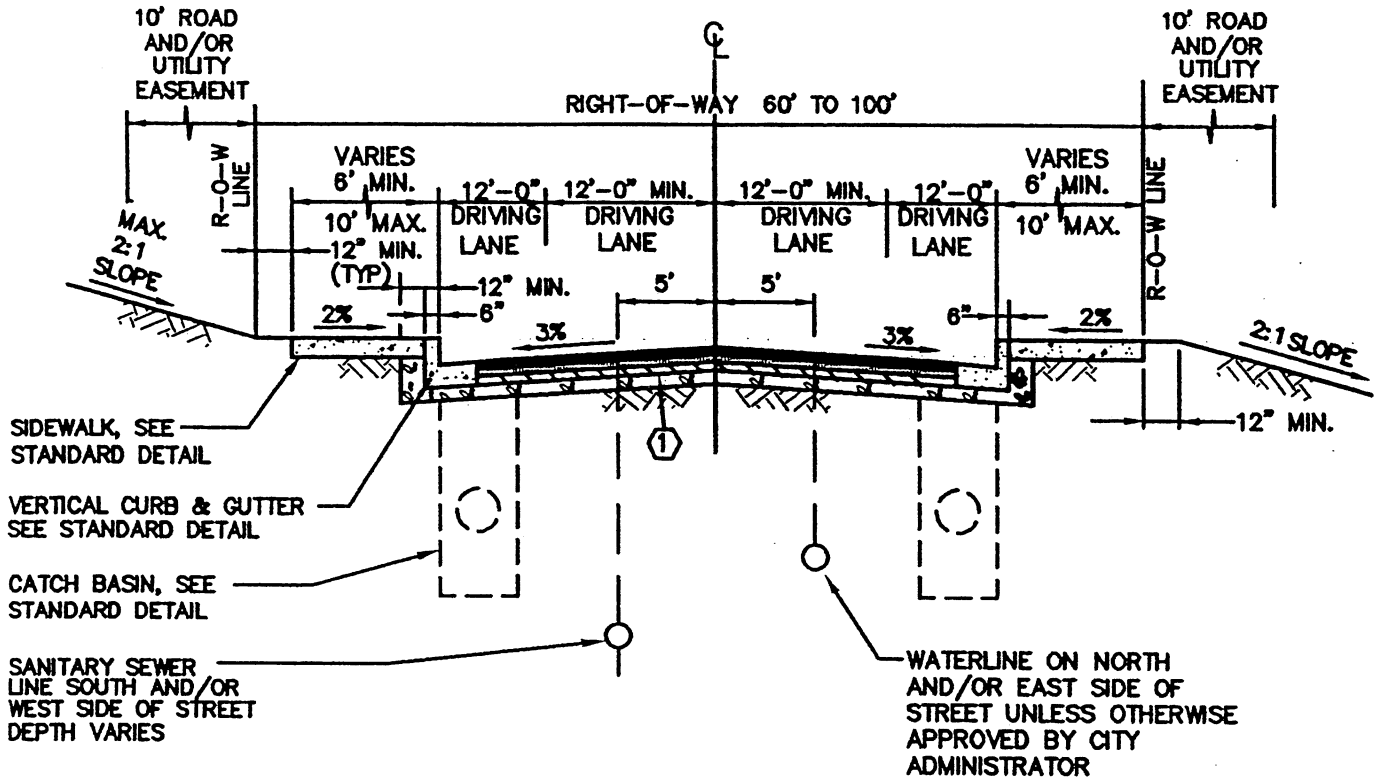

NOTE

(1) PAVEMENT DESIGN BY CURRENT WASHINGTON STATE LICENSED CIVIL ENGINEER AND AS APPROVED BY THE CITY ENGINEER.

CITY OF LONG BEACH			
MAJOR ARTERIAL STREET SECTION			
APPROVED: BY CITY ____ DATE ____			DWG. NO. ST-1
DATE: 8/96	DRWN: J.H.	CHKD: T.J.O.	SCALE: NONE

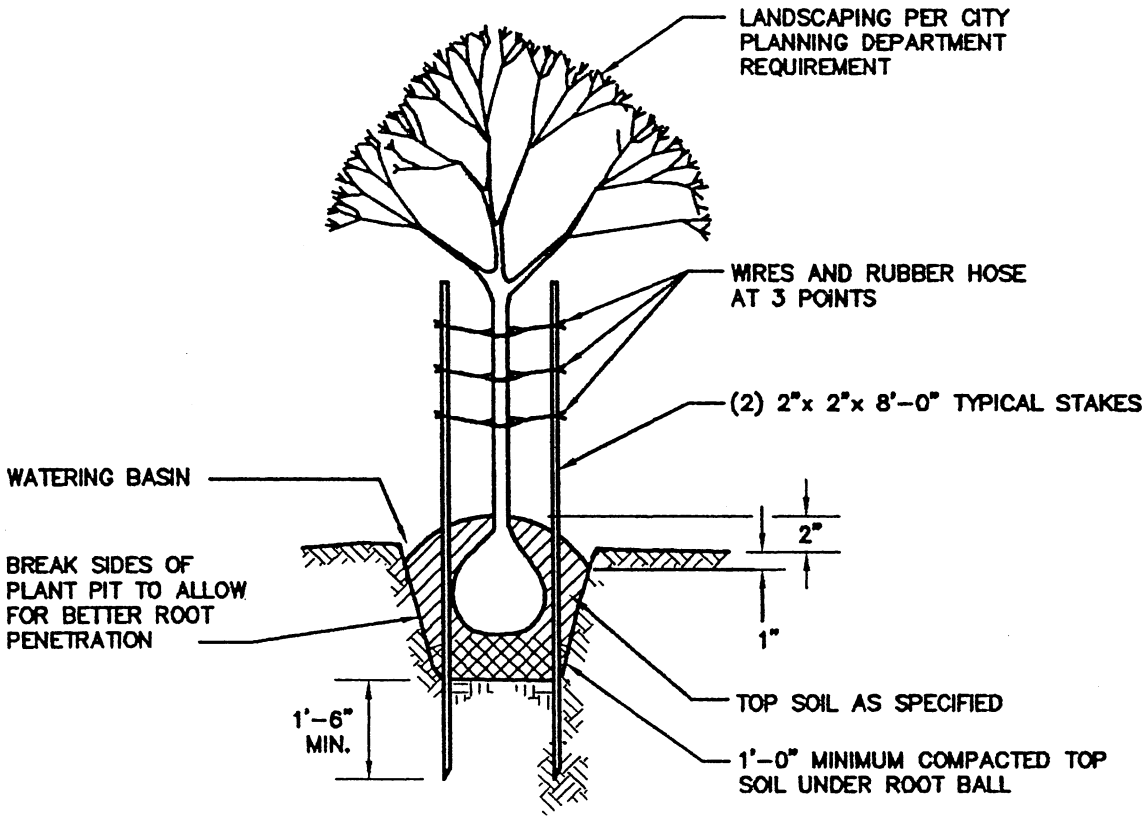

NOTES:

1. PLANT ALL TREES ONE INCH HIGHER THAN LEVEL AT WHICH GROWN IN NURSERY
2. TAKE CARE TO AVOID ROOTS WITH STAKES
3. PLANT PIT 3'-0" ø OR 1'-0" LARGER THAN ROOT SPREAD, WHICHEVER IS GREATER.

CITY OF LONG BEACH			
STREET TREE PLANTING AND STAKING DETAIL			
APPROVED: BY CITY / DATE			DWG. NO. LSCP-1
DATE: 8/96	DRWN: J.H.	CHKD: T.J.O.	SCALE: NONE