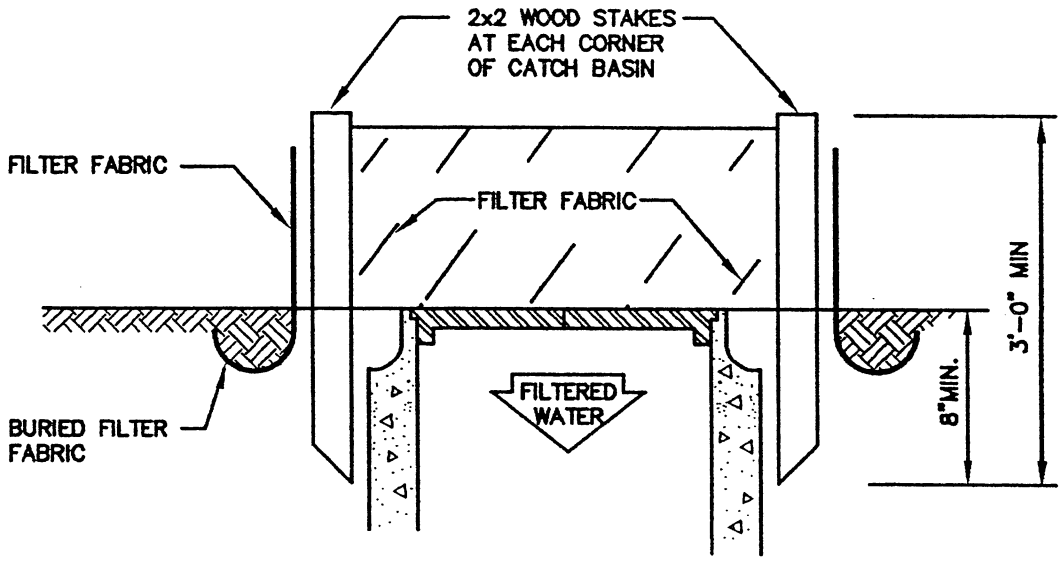

NOTE:
WOOD STAKES AROUND PERIMETER OF INLET SHALL BE SPACED A MAXIMUM OF 3 FEET APART

CITY OF LONG BEACH			
STORM DRAIN INLET PROTECTION			
APPROVED: BY CITY / DATE			DWG. NO. STOM-4
DATE: 8/96	DRWN: J.H.	CHKD: T.J.O.	SCALE: NONE